RENOVATION FOR:

CRAVEN COUNTY GOVERNMENT CENTER EAST

1208 E. MAIN STREET
HAVELOCK, NORTH CAROLINA 28532

ABBREVIATIONS

@	AT
ACC	ACCENT COLOR
ACOUS	ACOUSTIC
ACT	ACOUSTICAL CEILING TILE
ACW	ACOUSTICAL WALL PANELS
AD	AREA DRAIN
ADJ	ADJUSTABLE
AE	APPROVED EQUAL
AFF	ABOVE FINISH FLOOR
AFL	ATHLETIC FLOORING
AHU	AIR HANDLING UNIT
ALUM	ALUMINUM
ANOD	ANODIZED
ANSI	AMERICAN NATIONAL STANDARDS INSTITUTE
ATTEN	ATTENUATION
AWP	ACRYLIC WALL PANELS
BBT	BIOBASED TILE
BF	BLOCK FILL
BFC	BROOMED FINISHED CONCRETE
BL	BLINDS
BLDG	BUILDING
BLKG	BLOCKING
BOT	BOTTOM
BPG	BULLET PROOF GLASS
CB	CATCH BASIN
CEM	CEMENTIOUS SIDING
CF	CORK FLOORING
CFT	CERAMIC FLOOR TILE
CG	CURVED CEILING GRID
CI	CAST IRON
CI#	CURB INLET
CJ	CONTROL JOINT
CL	CENTERLINE
CLG	CEILING
CLR	CLEAR
CMU	CONCRETE MASONRY UNIT
CO	CLEAN OUT
COL	COLUMN
CONC	CONCRETE
CONSTR	CONSTRUCTION
CONTR	CONTRACTOR
CORR	CORRUGATED
CPT	CARPET
CPTT	CARPET TILE
CRC	COLD ROLLED CHANNEL
CRF	CORK RUBBER FLOORING
CS	COUNTERSUNK
CSCI	CONTRACTOR SUPPLIED, CONTRACTOR INSTALLED
CTB	CERAMIC TILE BASE
CW	CURTAINWALL
CWT	CERAMIC WALL TILE
DFP	DRY FOG PAINT
DIA	DIAMETER
DISP	DISPENSER
DN	DOWN
DP	DEEP
DR	DOOR
DS	DOWNSPOUT
DTL	DETAIL
EDG	EDGE BANDING
EES	EMERGENCY EYE WASH AND SHOWER
EFC	EPOXY FLOOR COATING
EIFS	EXTERIOR INSULATION FINISH SYSTEM
EIP	EXISTING IRON PIPE
EJ	EXPANSION JOINT
ELEV	ELEVATION
EN	ENAMEL
EPT	HIGH PERFORMANCE EPOXY PAINT
EQ	EQUAL
ES	EXPOSED STRUCTURE
EST	EXISTING
EXP	EXPOSED CEILING
EXT	EXTERIOR
E/W	EACH WAY
EWC	ELECTRIC WATER COOLER
FC	FIRECODE
FD	FLOOR DRAIN
FE	FIRE EXSTINGUISHER (SURFACE MOUNTED)
FEC	FIRE EXSTINGUISHER (SEMI-RECESSED)
FF	FINISH FLOOR
FH	FIRE HYDRANT
FLU	FLOURESCENT
FOF	FACE OF FRAME
FOM	FACE OF MASONRY
FT	FLOOR TILE
FTG	FOOTING
FV	FLOOD VENT
GA	GAGE
GALV	GALVANIZED
GC	GENERAL CONTRACTOR
GCT	GRANITE COUNTERTOP
GEN	GENERATOR
GFT	GRANITE FLOOR TILE
GL	GLASS
GMT	GLASS MOSAIC TILE
GT	GROUT
GWB	GYPSUM WALL BOARD
GYP	GYPSUM BOARD
HB	HOSE BIB
HC	HOLLOW CORE
HDC	HANDICAP
HDWD	HARDWOOD
HM	HOLLOW METAL
HORZ	HORIZONTAL
HR	HOUR
ID	INSIDE DIAMETER
IMP	INSULATED METAL PANEL
INSTAL	INSTALLATION
INSUL	INSULATION
INT	INTERIOR
INV	INVERT
JB	JOIST BEARING
JB#	JUNCTION BOX
JT	JOINT
L	LONG
LFT	LINOLEUM FLOOR TILE
LP	LIGHT POLE
LST	LINOLEUM SHEET FLOORING
LVS	LEAVES (DOOR)
LVT	LUXURY VINYL TILE
MATL	MATERIAL
MAX	MAXIMUM
MB	MASONRY - BRICK
MBL	MARBLE
MC	METAL CANOPY
MCT	METAL CEILING TILE
MECH	MECHANICAL
MFR	MANUFACTURER
MFT	MARBLE FLOOR TILE
MIN	MINIMUM
MO	MASONRY OPENING
MTB	MARBLE TILE BASE
MTD	MOUNTED
MTL	METAL
MWM	METAL WALK-OFF MAT
MWT	MARBLE WALL TILE
N/A	NOT APPLICABLE
NIC	NOT IN CONTRACT
NOM	NORMAL
OC	ON CENTER
OD	OUTSIDE DIAMETER
OFCI	OWNER FURNISHED, CONTRACTOR INSTALLED
OFOI	OWNER FURNISHED, OWNER INSTALLED
OPP	OPPOSITE
OSC	OVERFLOW SCUPPER
OZ	OUNCE
P	PAINT
PC	POLISHED CONCRETE
PERF	PERFORATED
PFT	PORCELAIN FLOOR TILE
PIV	POST INDICATOR VALVE
PL	PLATE
P-LAM	PLASTIC LAMINATE
P-LAM WD	PLASTIC LAMINATE WOOD DOORS
PLYWD	PLYWOOD
PNT	PAINT
POLYETH	POLYETHYLENE
PP	POWER POLE
PR	PAIR
PTB	PORCELAIN TILE BASE
PTD	PAINTED
PTP	PLASTIC TOILET PARTITIONS
PWT	PORCELAIN WALL TILE
PVC	POLYVINYL CHLORIDE
QS	QUARTZ SURFACE
QT	QUARRY TILE
QZT	QUARTZ TILE
R	RADIUS
R&S	ROD AND SHELF
RB	RESILIENT BASE
RBT	RUBBER TILE
RCP	REINFORCED CONCRETE
RD	ROOF DRAIN
RDL	ROOF DRAIN LEADER
RECEPT	RECEPTACLE
RECYF	RECYCLED FLOORING
REQD	REQUIRED
RES	RESILIENT
RM	RUBBER MAT
RO	ROUGH OPENING
ROW	RIGHT OF WAY
RSF	RESINOUS FLOORING
RTF	RESILENT TILE FLOORING
SAT	SPRAYED ACOUSTICAL TREATMENT
SC	SEALED CONCRETE
SCH	SCHEDULE
SCW	SOLID CORE WOOD
SDT	STATIC DISSIPATIVE TILE
SF	STOREFRONT
SHEATH	SHEATHING
SIM	SIMILAR
SP	SPACES
SQ	SQUARE
SQFT	SQUARE FEET
SRT	SLIP RESISTANT TILE
SS	STAINLESS STEEL
SSC	STAINED SEALED CONCRETE
SSG	STRUCTURAL SILICON GLAZING
SSM	SOLID SURFACE
ST	STEEL
ST&R	STAIR TREADS AND RISERS
STD	STANDARD
SUSP	SUSPENDED
T&G	TONGUE AND GROOVE
TB	TILE BASE
TC	TERRA COTTA
TCA	TILE COUNCIL OF AMERICA
TELE	TELEPHONE
TEMP	TEMPERED
TEXD	TEXTURED
TFT	TERRAZZO FLOOR TILE
TOC	TOP OF CURB
TOS	TOP OF STEEL
TP	TELEPHONE POLE
TS	TRANSITION STRIP
TV	TELEVISION
TVB	TELEVISION MOUNTING BRACKET
TYP	TYPICAL
UL	UNDERWRITERS LABORATORY
U/L	UTILITY/LIGHTS
UNO	UNLESS NOTED OTHERWISE
VACT	VINYL ACOUSTICAL TILE
VB	VAPOR BARRIER
VCT	VINYL COMPOSITION TILE
VERT	VERTICAL
VIF	VERIFY IN FIELD
VWC	VINYL WALL COVERING
W/	WITH
WC	WATER CLOSET
WD	WOOD
WF	WOOD FLOORING
WT	WALL TILE
WT*	WALL TILE - SEE ELEVATION
WWF	WELDED WIRE FABRIC
WWM	WELDED WIRE MESH

SYMBOL LEGEND

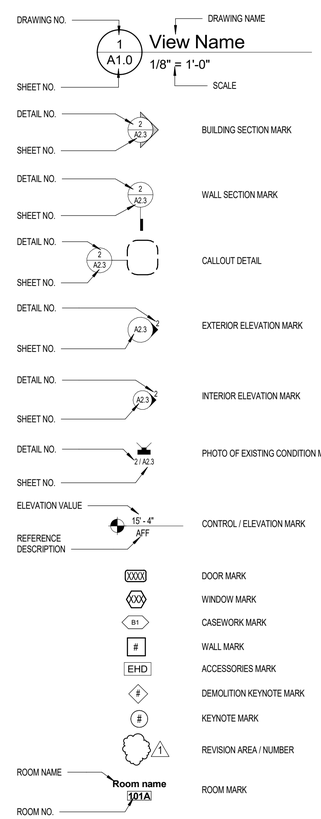

SHEET NAMING LEGEND

SECTION	DISCIPLINE
0 GENERAL	G COVER
1 PLANS	G CODE SUMMARY
2 EXTERIOR ELEVATIONS	G LIFE SAFETY
3 BUILDING / WALL SECTIONS	CE CIVIL
4 VERTICAL CIRCULATION	L LANDSCAPE
5 DETAILS	S STRUCTURAL
6 WINDOW & DOOR SCHEDULES	D DEMOLITION
7 INTERIOR ELEV / CASEWORK	A ARCHITECTURAL
	Q EQUIPMENT
	FP FIRE PROTECTION
	P PLUMBING
	M MECHANICAL
	E ELECTRICAL
	FA FIRE ALARM
	X MISCELLANEOUS

PAGE NUMBER: A1.01

APPLICABLE TO ARCHITECTURAL SHEETS ONLY

CONSULTANTS

CIVIL ENGINEER:

INDEPENDENT:

JOSEPH DUNNEHOO, PE
CRAVEN COUNTY PLANNING & INSPECTION DEPT.

CONTACT INFORMATION:

ADDRESS: ADDRESS

PHONE #: 252-636-6618

STRUCTURAL ENGINEER:

SCALENE DESIGN
FUNCTION + STRUCTURE + FORM

CONTACT INFORMATION:

ADDRESS: 421 N HARRINGTON ST, SUITE 440
RALEIGH, NC 27603

PHONE #: 919-825-0295

PLUMBING, MECHANICAL, AND ELECTRICAL ENGINEERS:

IMEG

CONTACT INFORMATION:

ADDRESS: 3221 BLUE RIDGE ROAD, SUITE 113
RALEIGH, NC 27612

PHONE #: 919-571-1111

INDEX OF DRAWINGS

GENERAL

G0.1	COVERSHEET
G0.2	BUILDING CODE SUMMARY
G1.1	LIFE SAFETY

STRUCTURAL

S001	GENERAL NOTES & ABBREVIATIONS
S101	FOUNDATION PLAN
S102	2ND FLOOR FRAMING PLAN
S103	ROOF FRAMING PLAN

ARCHITECTURAL

D1.1	DEMOLITION PLANS
D1.2	DEMOLITION - REFLECTED CEILING PLAN
D2.1	DEMOLITION - ELEVATIONS
A1.1	FLOOR PLANS
A1.2	REFLECTED CEILING PLANS
A1.3	ROOF PLAN
A1.4	FINISH PLANS
A1.5	ENLARGED PLANS & TOILET ELEVATIONS
A1.6	CASEWORK ELEVATIONS & DETAILS
A2.1	BUILDING ELEVATIONS
A3.1	BUILDING SECTIONS & DETAILS
A3.3	ELEVATOR SECTIONS
A5.1	DETAILS
A6.1	DOOR SCHEDULE
A6.2	STOREFRONT ELEVATIONS

PLUMBING

P000	PLUMBING COVERSHEET
P101	DEMOLITION PLAN - PLUMBING
P102	ROOF DEMOLITION PLAN - PLUMBING
P201	FLOOR PLAN - PLUMBING
P202	ROOF PLAN - PLUMBING
P300	PLUMBING DETAILS
P400	PLUMBING SCHEDULES

MECHANICAL

M000	HVAC COVERSHEET
M101	FIRST FLOOR PLAN - HVAC
M102	SECOND FLOOR PLAN - HVAC
M201	HVAC DETAILS
M202	HVAC DETAILS
M301	HVAC SCHEDULES

ELECTRICAL

E000	ELECTRICAL COVERSHEET
E201	FIRST FLOOR PLAN - LIGHTING
E202	SECOND FLOOR PLAN - LIGHTING
E211	FIRST FLOOR PLAN - POWER
E212	SECOND FLOOR PLAN - POWER
E400	ELECTRICAL DETAILS
E600	ELECTRICAL SCHEDULES
E601	ELECTRICAL SCHEDULES

FIRE ALARM

FA000	FIRE ALARM COVERSHEET
FA204	FIRST FLOOR PLAN - FIRE ALARM
FA205	SECOND FLOOR PLAN - FIRE ALARM

ALTERNATES

ALTERNATE G-1 - EXTERIOR SIDING
1. THE CONTRACTOR SHALL STIPULATE THE SUM TO BE ADDED TO THE BASE BID FOR REPLACEMENT OF EXISTING SHEATHING AND EIFS SYSTEM ON EXISITNG EXTERIOR WALLS AND SOFFITS WITH NEW SHEATHING, CEMENTITOUS SIDING AND SOFFIT FINISH SYSTEM AS NOTED IN PLANS.

OAKLEY COLLIER ARCHITECTS
OCA
109 Candlewood Road, Rocky Mount, NC 27804 (P) 252.937.2500
205 W. Martin Street, Raleigh, NC 27601

RENOVATION FOR:
CRAVEN COUNTY GOVERNMENT CENTER
CRAVEN COUNTY
1208 E. MAIN STREET, HAVELOCK, NORTH CAROLINA 28532

OAKLEY COLLIER ARCHITECTS P.A.
CERT NO. 50681
NORTH CAROLINA
ROCKY MOUNT, NC

TIMOTHY D. OAKLEY
REGISTERED ARCHITECT
NORTH CAROLINA
ROCKY MOUNT, NC
05/30/26

GENERAL NOTE:
Prior to construction start. Contractor shall verify & be responsible for all Dimensions.

Revisions #	Description	Date

Date: MAY 30 2026	Project No.: 25012
Drawn By: ACR	Sheet No.: G0.1
Checked By: DG	
Sheet Title: COVERSHEET	

Copyright © 2025 Oakley Collier Architects. These drawings are of the property of the Architect for use under his supervision. No reproduction or other use is allowed without permission.

2018 APPENDIX B BUILDING CODE SUMMARY

Name of Project: CRAVEN COUNTY GOVERNMENT CENTER EAST
Address: 1208 E. MAIN STREET, HAVELOCK, NORTH CAROLINA Zip Code: 28532
Owner/Authorized Agent: ZACH CHENOWETH
Phone # 252-617-7940 E-Mail: ZCHENOWETH@CRAVENCOUNTYNC.GOV
Owned By: ■ City/County ☐ Private ☐ State
Code Enforcement Jurisdiction: ■ City HAVELOCK ☐ County ☐ State

CONTACT: TIMOTHY D. OAKLEY, ARCHITECT

DESIGNER	FIRM	NAME	LICENSE#	TELEPHONE#	E-MAIL
Architectural	OAKLEY COLLIER ARCHITECTS	TIM OAKLEY	5967	252-937-2500	TOAKLEY@OAKLEYCOLLIER.COM
Civil	CRAVEN COUNTY	JOE DUNNEHOO	----	----	JOSEPH.DUNNEHOO@CRAVENCOUNTYNC.GOV
Electrical	IMEG CORPORATION	PATRICK MCCABE	51195	919-571-1111	PATRICK.J.MCCABE@IMEGCORP.COM
Fire Alarm					
Plumbing	IMEG CORPORATION	PATRICK MCCABE	51195	919-571-1111	PATRICK.J.MCCABE@IMEGCORP.COM
Mechanical	IMEG CORPORATION	PATRICK MCCABE	51195	919-571-1111	PATRICK.J.MCCABE@IMEGCORP.COM
Sprinkler-Standpipe					
Structural	SCALENE DESIGN	ROBERT MACIA	026690	919-825-0295	RMACIA@SCALENE-DESIGN.COM
Retaining Walls >5' High					
Other					

("Other" should include firms and individuals such as truss, precast, pre-engineered, interior designers, etc.)

2018 NC BUILDING CODE: ☐ New Building ☐ Addition ■ Renovation
☐ 1st Time Interior Completion
☐ Shell/Core - Contact the local inspection jurisdiction for possible additional procedures and requirements
☐ Phased Construction - Shell/Core - Contact the local inspection jurisdiction for possible additional procedures and requirements

2018 NC EXISTING BUILDING CODE: Existing Alteration ☐ Prescriptive ☐ Repair ☐ Chapter 14 ☐ Level I ☐ Level II ■ Level III ☐ Historic Property ☐ Change of Use

CONSTRUCTED: (date) 1981 **CURRENT OCCUPANCY(S)** (Ch.3): BUSINESS
RENOVATED: (date) N/A **PROPOSED OCCUPANCY(S)** (Ch.3): BUSINESS

Risk Category (Table 1604.5): Current: ☐ I ■ II ☐ III ☐ IV
Proposed: ☐ I ■ II ☐ III ☐ IV

BASIC BUILDING DATA

Construction Type: ☐ I-A ☐ I-B ☐ II-A ■ II-B ☐ III-A ☐ III-B ☐ IV ☐ V-A ☐ V-B

Sprinklers: ■ No ☐ Partial ☐ Yes ☐ NFPA 13 ☐ NFPA 13R ☐ NFPA 13D

Standpipes: ■ No ☐ Yes Class ☐ I ☐ II ☐ III ☐ Wet ☐ Dry

Fire District: ■ No ☐ Yes **Flood Hazard Area:** ■ No ☐ Yes

Special Inspections Required: ■ No ☐ Yes (Contact the local inspection jurisdiction for additional procedures and requirements.)

GROSS BUILDING AREA TABLE

FLOOR	EXISTING (SQ FT)	ADDITION (SQ FT)	SUB-TOTAL
6th Floor			
5th Floor			
4th Floor			
3rd Floor			
2nd Floor	3,274	0	3,274
1st Floor	7,207	0	7,207
Basement			
TOTAL	10,481	0	10,481

ALLOWABLE AREA

Primary Occupancy Classification(s):

Assembly ☐ A-1 ☐ A-2 ■ A-3 ☐ A-4 ☐ A-5
Business ■
Educational ☐
Factory ☐ F-1 Moderate ☐ F-2 Low
Hazardous ☐ H-1 Detonate ☐ H-2 Deflagrate ☐ H-3 Combust ☐ H-4 Health ☐ H-5 HPM
Institutional ☐ I-1 Condition ☐ 1 ☐ 2
☐ I-2 Condition ☐ 1 ☐ 2
☐ I-3 Condition ☐ 1 ☐ 2 ☐ 3 ☐ 4 ☐ 5
☐ I-4
Mercantile ☐
Residential ☐ R-1 ☐ R-2 ☐ R-3 ☐ R-4
Storage ☐ S-1 Moderate ☐ S-2 Low ☐ High-piled
☐ Parking Garage ☐ Open ☐ Enclosed ☐ Repair Garage
Utility and Miscellaneous ☐

Accessory Occupancy Classification(s): N/A
Incidental Uses (Table 509): N/A
Special Uses (Chapter 4 - List Code Sections): N/A
Special Provisions: (Chapter 5 - List Code Sections): N/A
Mixed Occupancy: ☐ No ■ Yes Separation: 0 Hr. Exception:

■ Non-Separated Use (508.3) - The required type of construction for the building shall be determined by applying the height and area limitations for each of the applicable occupancies to the entire building. The most restrictive type of construction, so determined, shall apply to the entire building.

☐ Separated Use (508.4) - See below for area calculations for each story. The area of the occupancy shall be such that the sum of the ratios of the actual floor area of each use divided by the allowable floor area for each use shall not exceed 1:

$$\frac{\text{Actual Area of Occupancy A}}{\text{Allowable Area of Occupancy A}} + \frac{\text{Actual Area of Occupancy B}}{\text{Allowable Area of Occupancy B}} \leq 1$$

____ + ____ + …… = ____ ≤ **1.00**

STORY NO.	DESCRIPTION AND USE	(A) BLDG AREA PER STORY (ACTUAL)	(B) TABLE 506.2 AREA[4]	(C) AREA FOR FRONTAGE INCREASE[1,5]	(D) ALLOWABLE AREA PER STORY OR UNLIMITED[2,3]

1. Frontage area increases from Section 506.3 are computed thus:
   a. Perimeter which fronts a public way or open space having 20 feet minimum width = N/A (F)
   b. Total Building Perimeter = N/A (P).
   c. Ratio (F/P) = N/A (F/P)
   d. W = Minimum width of public way = N/A (W)
   e. Percent of frontage increase *If = 100[F/P-0.25] x W/30* = N/A (%).
2. Unlimited area applicable under conditions of Section 507.
3. Maximum Building Area = total number of stories in the building x D (maximum 3 stories) (506.2).
4. The maximum area of open parking garages must comply with Table 406.5.4 .
5. Frontage increase is based on the unsprinklered area value in Table 506.2.

ALLOWABLE HEIGHT

	ALLOWABLE	SHOWN ON PLANS	CODE REFERENCE 1
Building Height in Feet (Table 504.3) 2	55' - 0"	28' - 6 1/2"	N/A
Building Height in Stories (Table 504.4) 3	3	2	N/A

1. Provide code reference if the "Shown on Plans" quantity is not based on Table 504.3 or 504.4.
2. The maximum height of air traffic towers must comply with Table 412.3.1.
3. The maximum height of open parking garages must comply with Table 406.5.4.

FIRE PROTECTION REQUIREMENTS

BUILDING ELEMENT	FIRE SEPARATION DISTANCE (FEET)	RATING REQ'D	RATING PROVIDED (W/ * REDUCTION)	DETAIL# AND SHEET#	DESIGN# FOR RATED ASSEMBLY	SHEET# FOR RATED PENETRATION	SHEET# FOR RATED JOINTS
Structural Frame, including columns, girders, trusses	>30	0	0	N/A	N/A	N/A	N/A
Exterior Bearing Walls							
North	>30	0 HR	-	-	-	-	-
East	>30	0 HR	-	-	-	-	-
West	>30	0 HR	-	-	-	-	-
South	>30	0 HR	-	-	-	-	-
Interior Bearing Walls		0 HR	-	-	-	-	-
Exterior Non-bearing Walls and Partitions							
North	>30	0 HR	-	-	-	-	-
East	>30	0 HR	-	-	-	-	-
West	>30	0 HR	-	-	-	-	-
South	>30	0 HR	-	-	-	-	-
Interior Non-bearing Walls and Partitions		0 HR	-	-	-	-	-
Floor Construction, Including Supporting Beams and Joists		0 HR	-	-	-	-	-
Floor Ceiling Assembly		0 HR	-	-	-	-	-
Columns Supporting Floors		0 HR	-	-	-	-	-
Roof Construction, Including Supporting Beams and Joists		0 HR	-	-	-	-	-
Roof Ceiling Assembly		0 HR	-	-	-	-	-
Columns Supporting Roof		0 HR	-	-	-	-	-
Shaft Enclosures - Exit		1 HR	-	-	-	-	-
Shaft Enclosures - Other		1 HR	-	-	-	-	-
Corridor Separation		1 HR	-	-	-	-	-
Occupancy/Fire Barrier Separation		NA	-	-	-	-	-
Party/Fire Wall Separation		NA	-	-	-	-	-
Smoke Barrier Separation		NA	-	-	-	-	-
Smoke Partition		NA	-	-	-	-	-
Tenant/Dwelling Unit/Sleeping Unit Separation		NA	-	-	-	-	-
Incidental Use Separation		NA	-	-	-	-	-

* Indicates section number permitting reduction.

PERCENTAGE OF WALL OPENING CALCULATIONS

FIRE SEPARATION DISTANCE (FEET) FROM PROPERTY LINES	DEGREE OF OPENINGS PROTECTION (TABLE 705.8)	ALLOWABLE AREA (%)	ACTUAL SHOWN ON PLANS (%)
30 OR GREATER	UP, NS	NO LIMIT	N/A

LIFE SAFETY SYSTEM REQUIREMENTS

Emergency Lighting: ☐ No ■ Yes
Exit Signs: ☐ No ■ Yes
Fire Alarm: ☐ No ■ Yes
Smoke Detection Systems: ☐ No ☐ Yes ■ Partial ____
Carbon Monoxide Detection: ■ No ☐ Yes

LIFE SAFETY PLAN REQUIREMENTS

Life Safety Plan Sheet #: G1.1

■ Fire and/or smoke rated wall locations (Chapter 7).
☐ Assumed and real property line locations (if not on the site plan).
☐ Exterior wall opening area with respect to distance to assumed property lines (705.8).
■ Occupancy Use for each area as it relates to occupant load calculation (Table 1004.1.2).
■ Occupant loads for each area.
■ Exit access travel distances (1017).
☐ Common path of travel distances (Tables 1006.2.1 & 1006.3.2(1)).
☐ Dead end lengths (1020.4).
■ Clear exit widths for each exit door.
■ Maximum calculated occupant load capacity each exit door can accommodate based on egress width (1005.3).
■ Actual occupant load for each exit door.
☐ A separate schematic plan indicating where fire rated floor/ceiling and/or roof structure is provided for purposes of occupancy separation.
■ Location of doors with panic hardware (1010.1.10).
☐ Location of doors with delayed egress locks and the amount of delay (1010.1.9.7).
☐ Location of doors with electromagnetic egress locks (1010.1.9.9).
☐ Location of doors equipped with hold-open devices.
☐ Location of emergency escape windows (1030).
☐ The square footage of each fire area (202).
☐ The square footage of each smoke compartment for Occupancy Classification I-2 (407.5).
■ Code exceptions or table notes that may have been utilized regarding the items above.

ACCESSIBLE DWELLING UNITS

(SECTION 1107)

TOTAL UNITS	ACCESSIBLE UNITS REQUIRED	ACCESSIBLE UNITS PROVIDED	TYPE A UNITS REQUIRED	TYPE A UNITS PROVIDED	TYPE B UNITS REQUIRED	TYPE B UNITS PROVIDED	TOTAL ACCESSIBLE UNITS PROVIDED
N/A	N/A	N/A	N/A	N/A	N/A	N/A	N/A

ACCESSIBLE PARKING

(SECTION 1106)

LOT OR PARKING AREA	TOTAL # OF PARKING SPACES: REQUIRED	TOTAL # OF PARKING SPACES: PROVIDED	# OF ACCESSIBLE SPACES PROVIDED: REGULAR WITH 5' ACCESS AISLE	VAN SPACES WITH: 132" ACCESS AISLE	VAN SPACES WITH: 8' ACCESS AISLE	TOTAL # ACCESSIBLE SPACES PROVIDED
			EXISTING TO REMAIN			
TOTAL						

PLUMBING FIXTURE REQUIREMENTS

(TABLE 2902.1)

USE		WATERCLOSETS: MALE	WATERCLOSETS: FEMALE	WATERCLOSETS: UNISEX	URINALS	LAVATORIES: MALE	LAVATORIES: FEMALE	LAVATORIES: UNISEX	SHOWERS /TUBS	DRINKING FOUNTAINS: REGULAR	DRINKING FOUNTAINS: ACCESSIBLE
SPACE	EXISTING										
	NEW	5	5	-		5	5	-		N/A	N/A
	REQ'D	3	3	-		3	3	-		1	1

SPECIAL APPROVALS

Special approval: (Local Jurisdiction, Department of Insurance, OSC, DPI, DHHS, etc., describe below)

ENERGY SUMMARY

SEE SHEET E000 *For detailed code compliance.*

ENERGY REQUIREMENTS:
The following data shall be considered minimum and any special attribute required to meet the energy code shall also be provided. Each Designer shall furnish the required portions of the project information for the plan data sheet. If performance method, state the annual energy cost for the standard reference design vs annual energy cost for the proposed design.

Existing building envelope complies with code: ☐ No ☐ Yes (The remainder of this section is not applicable)

Exempt Building: ■ No ☐ Yes (Provide code or statutory reference) ____

Climate Zone: ■ 3A ☐ 4A ☐ 5A

Method of Compliance: Energy Code ☐ Performance ■ Prescriptive
ASHRAE 90.1 ☐ Performance ☐ Prescriptive
(If "Other" specify here) ____

THERMAL ENVELOPE (Prescriptive method only)

Roof/ceiling Assembly (each assembly)
Description of assembly: EXISITNG
U-Value of total assembly: N/A
R-Value of insulation: R-25
Skylights in each assembly: N/A
U-Value of skylight: N/A
Total square footage of skylights in each assembly: N/A

Exterior Walls (each assembly)
Description of assembly: EXISTING
U-Value of total assembly: N/A
R-Value of insulation: N/A
Openings (windows or doors with glazing)
U-Value of assembly: N/A
Solar heat gain coefficient: N/A
Projection factor: N/A
Door R-Values: N/A

Walls below grade (each assembly)
Description of assembly: N/A
U-Value of total assembly: N/A
R-Value of total assembly: N/A

Floors over unconditioned space (each assembly)
Description of assembly: N/A
U-Value of total assembly: N/A
R-Value of total assembly: N/A

Floors slab on grade
Description of assembly: EXISTING
U-Value of total assembly: N/A
R-Value of insulation: N/A
Horizontal/vertical requirement: N/A
Slab heated: N/A

STRUCTURAL DESIGN

SEE SHEET S001 *For detailed code compliance.*

DESIGN LOADS:

Importance Factors: Snow N/A (I_S) Seismic N/A (I_E)

Live Loads: Roof N/A psf Mezzanine N/A psf Floor N/A psf

Ground Snow Load: N/A psf

Wind Load: Ultimate Wind Speed N/A mph (ASCE-7) Exposure Category N/A

SEISMIC DESIGN CATEGORY: ☐ A ■ B ☐ C ☐ D
Provide the following Seismic Design Parameters:

Risk Category (Table 1604.5): ☐ I ■ II ☐ III ☐ IV

Spectral Response Acceleration: S_S N/A %g S_1 N/A %g

Site Classification (ASCE 7): ■ A ☐ B ☐ C ☐ D ☐ E ☐ F
Data Source: ☐ Field Test ■ Presumptive ☐ Historical Data

Basic Structural System: ■ Bearing Wall ☐ Building Frame ☐ Moment Frame ☐ Dual w/Special Moment Frame ☐ Dual w/Intermediate R/C or Special Steel ☐ Inverted Pendulum

Analysis Procedure: ☐ Simplified ■ Equivalent Lateral Force ☐ Dynamic

Architectural, Mechanical, Components anchored: ☐ Yes ■ No

LATERAL DESIGN CONTROL: ☐ Earthquake ■ Wind

SOIL BEARING CAPACITIES:
Field Test (provide copy of test report): N/A psf
Presumptive Bearing Capacity: N/A psf
Pile Size, Type, and Capacity: N/A

MECHANICAL DESIGN

SEE SHEET M000 *For detailed code compliance.*

MECHANICAL SYSTEMS, SERVICE SYSTEMS AND EQUIPMENT

Thermal Zone N/A

Exterior Design Conditions
Winter dry bulb: N/A
Summer dry bulb: N/A
Relative humidity: N/A

Interior Design Conditions
Winter dry bulb: N/A
Summer dry bulb: N/A
Relative humidity: N/A

Building Heating Load: N/A
Building Cooling Load: N/A

Mechanical Spacing Conditioning System
Unitary
Description of unit: N/A
Heating efficiency: N/A
Cooling efficiency: N/A
Size category of unit: N/A
Boiler
Size category; if oversized, state reason: N/A
Chiller
Size category; if oversized, state reason: N/A

List equipment efficiencies: N/A

ELECTRICAL DESIGN

SEE SHEET E000 *For detailed code compliance.*

ELECTRICAL SYSTEM AND EQUIPMENT

Method of Compliance: Energy Code: ■ Prescriptive ☐ Performance
ASHRAE 90.1: ☐ Prescriptive ☐ Performance

Lighting Schedule (each fixture type)
Lamp type required in fixture: N/A
Number of lamps in fixture: N/A
Ballast type used in the fixture: N/A
Number of ballasts in fixture: N/A
Total wattage per fixture: N/A
Total interior wattage specified vs. allowed (whole building or space by space): N/A
Total exterior wattage specified vs. allowed: N/A

Additional Efficiency Package Options
(When using the 2018 NCECC; not required for ASHRAE 90.1)
■ C406.2 More Efficient HVAC Equipment Performance
☐ C406.3 Reduced Lighting Power Density
☐ C406.4 Enhanced Digital Lighting Controls
☐ C406.5 On-Site Renewable Energy
☐ C406.6 Dedicated Outdoor Air System
☐ C406.7 Reduced Energy Use in Service Water Heating

OAKLEY COLLIER ARCHITECTS
OCA
109 Candlewood Road, Rocky Mount, NC 27804 [P] 252.937.2500
205 W. Martin Street, Raleigh, NC 27601

RENOVATION FOR:
CRAVEN COUNTY GOVERNMENT CENTER EAST
CRAVEN COUNTY
1208 E. MAIN STREET, HAVELOCK, NORTH CAROLINA 28532

OAKLEY COLLIER ARCHITECTS, P.A. REGISTERED ARCHITECTURAL CORPORATION CERT. NO. 5068 NORTH CAROLINA ROCKY MOUNT, NC

TIMOTHY D. OAKLEY REGISTERED ARCHITECT NORTH CAROLINA ROCKY MOUNT, NC 05/30/26

GENERAL NOTE:
Prior to construction start. Contractor shall verify & be responsible for all Dimensions.

Revisions
#	Description	Date

Date: MAY 30 2026	Project No.: 25012
Drawn By: ACR	Sheet No.: G0.2
Checked By: DG	

Sheet Title: BUILDING CODE SUMMARY

Copyright © 2025 Oakley Collier Architects. These drawings are of the property of the Architect for use under his supervision. No reproduction or other use is allowed without permission.

NOTE:
BASIS OF DESIGN ARCHITECTURAL SERIES MODEL AL2409-R4 SEMI RECESSED FULL PANEL DOOR WITH CLEAR ACRYLIC GLAZING. 31/2" ROLLED EDGE TRIM, VERTICAL DIE CUT RED LETTERING, WHITE BAKED ENAMEL INTERIOR BOX AS MANUFACTURED BY LARSEN'S MANUFACTURING COMPANY OR APPROVED EQUAL.

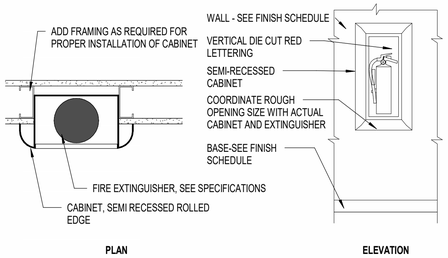

3 / G1.1 SEMI RECESSED FEC

1 1/2" = 1'-0"

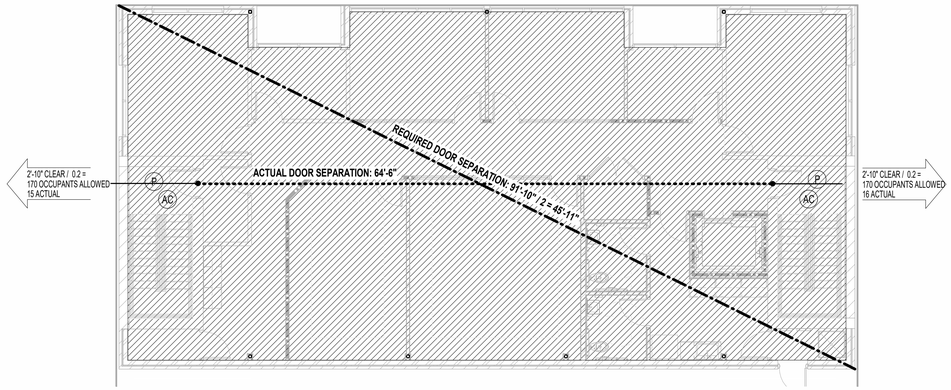

1 / G1.1 SECOND FLOOR LIFE SAFETY PLAN

1/8" = 1'-0"

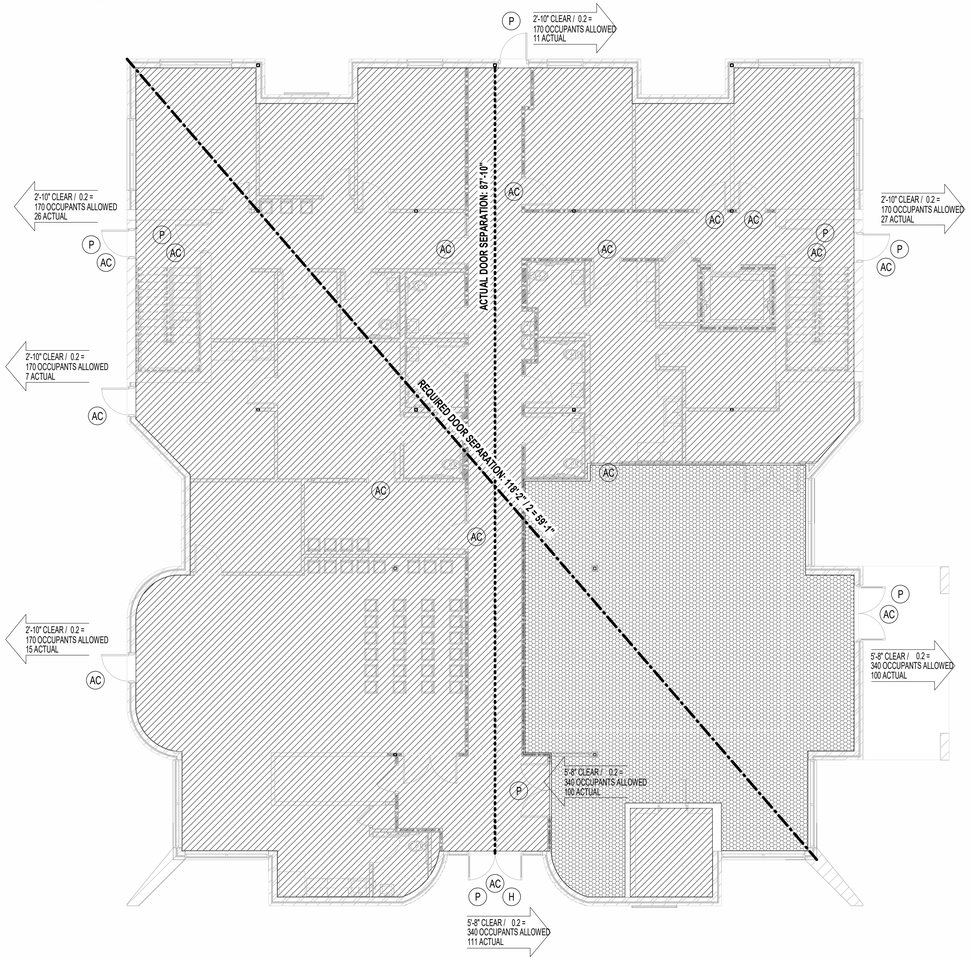

2 / G1.1 FIRST FLOOR LIFE SAFETY PLAN

1/8" = 1'-0"

LIFE SAFETY LEGEND

- XX' DOOR / 0.2" — EGRESS WIDTH
- XXX OCC. ALLOWED — EGRESS CAPACITY FACTOR
- XXX ACTUAL — EGRESS CAPACITY ALLOWED
- ACTUAL EGRESS LOAD
- ANTICIPATED EGRESS LOAD
- X / XXX — OCCUPANCY; SQUARE FEET OF ROOM
- XX / XX — OCCUPANT LOAD; OCCUPANT LOAD FACTOR
- EXIT SEPARATION DISTANCE - REQUIRED
- EXIT SEPARATION DISTANCE - PROVIDED
- MAXIMUM TRAVEL DISTANCE
- COMMON PATH OF TRAVEL
- (H) HANDICAP DOOR OPERATOR WALL MOUNTED SWITCH
- (P) PANIC HARDWARE
- (AC) ACCESS CONTROLLED DOOR
- EXIT SIGN
- EXIT SIGN / EMERGENCY LIGHT
- EMERGENCY LIGHT
- (H) HORN TYPE AUDIO / VISUAL APPLIANCE
- (F) FIRE ALARM PULL STATION
- FEC — FIRE EXTINGUISHER IN CABINET SEMI-RECESSED
- FE — FIRE EXTINGUISHER - SURFACE MOUNTED

NOTE: ELECTRICAL PLANS FOR COMPLETE DESCRIPTION OF DEVICES AND ADDITIONAL DETAILS INCLUDING MOUNTING AND PLACEMENT.

DOOR CLEARANCE LEGEND

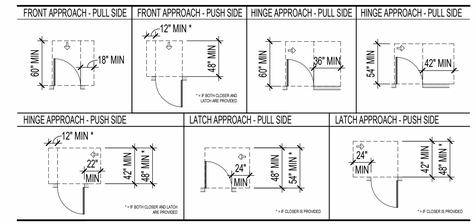

MEANS OF EGRESS: OCCUPANT LOAD

	SPACE	SF / AREA PER OCCUPANT (PER TABLE 1004.1.2)	LOAD	COMMENTS
FIRST FLOOR	BUSINESS: B	5,397 SF / 100 GROSS	54	
	ASSEMBLY: A-3	1,400 SF / 7 NET	200	
	SUB-TOTAL (FIRST FLOOR)		**254**	
SECOND FLOOR	BUSINESS: B	3,032 SF / 100 GROSS	31	
	ASSEMBLY: A-3	N/A	-	
	SUB-TOTAL (SECOND FLOOR)		**31**	
TOTAL EGRESS DESIGN OCCUPANT LOAD			**285**	

OAKLEY COLLIER ARCHITECTS
109 Candlewood Road, Rocky Mount, NC 27804 [P] 252.937.2500
205 W. Martin Street, Raleigh, NC 27601

RENOVATION FOR:
CRAVEN COUNTY GOVERNMENT CENTER EAST
CRAVEN COUNTY
1208 E. MAIN STREET, HAVELOCK, NORTH CAROLINA 28532

OAKLEY COLLIER ARCHITECTS, P.A. — REGISTERED ARCHITECTURAL CORPORATION — CERT NO. 50681 — NORTH CAROLINA — ROCKY MOUNT, NC

TIMOTHY D. OAKLEY — REGISTERED ARCHITECT — NORTH CAROLINA — ROCKY MOUNT, NC — 05/30/26

GENERAL NOTE:
Prior to construction start. Contractor shall verify & be responsible for all Dimensions.

Revisions

#	Description	Date

Date: MAY 30 2026	Project No.: 25012
Drawn By: ACR	Sheet No.: G1.1
Checked By: DG	
Sheet Title: LIFE SAFETY	

Copyright © 2025 Oakley Collier Architects. These drawings are of the property of the Architect for use under his supervision. No reproduction or other use is allowed without permission.

DESIGN CRITERIA

BUILDING CODES: 2018 NORTH CAROLINA STATE BUILDING CODE
ASCE 7-10 MINIMUM DESIGN LOADS FOR BUILDINGS AND OTHER STRUCTURES

RISK CATEGORY: II

DESIGN LIVE LOADS:	UNIFORM	CONCENTRATED
OFFICE	50 PSF	2,000 LBS
PUBLIC AREAS/LOBBIES	100 PSF	2,000 LBS
ROOF	20 PSF	300 LBS

*ALL LIVE LOADS ARE REDUCED BASED ON TRIBUTARY AREA AS ALLOWED BY THE BUILDING CODES.

SNOW LOAD:	
GROUND SNOW LOAD, PG	10 PSF
IMPORTANCE FACTOR, IS	1.0
SNOW EXPOSURE FACTOR, CE	1.0
THERMAL FACTOR, CT	1.0
FLAT ROOF SNOW LOAD, PF	10 PSF

FUTURE LOADS: UNLESS SPECIFICALLY INDICATED ON THE STRUCTURAL DESIGN DRAWINGS THERE HAVE BEEN NO DESIGN PROVISIONS MADE TO ACCOMMODATE FUTURE LOADS OR TO ACCOMMODATE FUTURE ADDITIONS TO THE STRUCTURE.

GEOTECHNICAL INFO: FOUNDATION DESIGN IS BASED ON A PRESUMPTIVE ALLOWABLE BEARING CAPACITY OF 2,000 PSF. GENERAL CONTRACTOR TO FIELD VERIFY PRIOR TO CONSTRUCTION.

GENERAL

G-01 THE CONTRACTOR IS RESPONSIBLE FOR COORDINATION OF THE STRUCTURAL WORK WITH CIVIL, LANDSCAPE ARCHITECTURAL, ARCHITECTURAL, MECHANICAL, ELECTRICAL, AND PLUMBING DOCUMENTS AS WELL AS ANY OTHER APPLICABLE TRADES. THE CONTRACTOR IS TO NOTIFY THE DESIGN TEAM OF ANY IDENTIFIED DISCREPANCIES PRIOR TO THE START OF CONSTRUCTION.

G-02 THE STRUCTURAL CONTRACT DOCUMENTS REPRESENT THE FINISHED STRUCTURE AND EXCEPT WHERE SPECIFICALLY SHOWN DO NOT INDICATE THE MEANS OR METHODS OF CONSTRUCTION. THE CONTRACTOR IS RESPONSIBLE FOR ALL CONSTRUCTION MEANS, METHODS, TECHNIQUES, SEQUENCE, AND PROCEDURES.

G-03 THE CONTRACTOR IS RESPONSIBLE FOR THE STABILITY OF THE STRUCTURE AND FOR APPLICATION OF CONSTRUCTION LOADS TO THE STRUCTURE UNTIL THE CONSTRUCTION OF THE STRUCTURE IS COMPLETE. THE CONTRACTOR IS RESPONSIBLE FOR THE DESIGN, INSTALLATION AND REMOVAL OF ALL TEMPORARY BRACING, FORMWORK, SUPPORTS, AND SHORING REQUIRED TO STABILIZE THE STRUCTURE DURING CONSTRUCTION. THE CONTRACTOR IS TO UTILIZE A THIRD PARTY STRUCTURAL ENGINEER TO PROVIDE THE DESIGN AND DOCUMENTATION FOR TEMPORARY BRACING, FORMWORK, SUPPORTS AND SHORING AS REQUIRED BY THE PROJECT SPECIFICATIONS.

G-04 THE CONTRACTOR IS TO VERIFY ALL EXISTING SITE GRADING CONDITIONS, EXISTING UTILITIES AND EXISTING BUILDING DIMENSIONS AND CONDITIONS AS THEY APPLY TO THE NEW STRUCTURAL CONSTRUCTION. THE CONTRACTOR IS TO NOTIFY THE DESIGN TEAM OF ANY IDENTIFIED DISCREPANCIES PRIOR TO THE START OF CONSTRUCTION.

G-05 THE CONTRACTOR IS TO PROTECT ALL EXISTING AND NEW UTILITIES, STRUCTURES, AND FACILITIES FROM DAMAGE DURING CONSTRUCTION.

G-06 ANY WORK NOT IN CONFORMANCE WITH THE STRUCTURAL CONTRACT DOCUMENTS OR THE APPLICABLE BUILDING CODE(S) WILL BE CORRECTED BY THE CONTRACTOR IN A MANNER ACCEPTABLE TO THE STRUCTURAL ENGINEER OF RECORD.

G-07 SECTIONS, DETAILS AND NOTES APPLY TO ALL LIKE OR SIMILAR CONDITIONS.

G-08 DO NOT SCALE STRUCTURAL DRAWINGS TO OBTAIN DIMENSIONAL INFORMATION. THE CONTRACTOR IS TO REQUEST ANY DIMENSIONAL INFORMATION REQUIRED.

G-09 THE STRUCTURAL PLANS DO NOT SHOW EVERY OPENING OR PENETRATION REQUIRED THROUGH STRUCTURAL ELEMENTS. THE CONTRACTOR IS TO VERIFY ALL OPENING SIZES AND LOCATIONS WITH OTHER DISCIPLINES, TRADES AND SHOP DRAWINGS. OPENINGS ARE TO BE CONSTRUCTED USING TYPICAL DETAILS AND CRITERIA PROVIDED ON THE STRUCTURAL DRAWINGS. OPENINGS REQUIRED THAT CANNOT CONFORM TO THE TYPICAL DETAILS OR CRITERIA PROVIDED ON THE STRUCTURAL DRAWINGS ARE TO BE SUBMITTED TO THE STRUCTURAL ENGINEER FOR REVIEW.

DEMOLITION

D-01 THE CONTRACTOR IS RESPONSIBLE FOR THE STABILITY OF THE EXISTING STRUCTURE AND FOR APPLICATION OF CONSTRUCTION LOADS TO THE EXISTING STRUCTURE DURING THE DEMOLITION PROCESS AND UNTIL THE FINAL CONSTRUCTION OF THE STRUCTURE IS COMPLETE. THE CONTRACTOR IS RESPONSIBLE FOR THE DESIGN, INSTALLATION AND REMOVAL OF ALL TEMPORARY BRACING, FORMWORK, SUPPORTS, AND SHORING REQUIRED TO STABILIZE THE EXISTING STRUCTURE DURING CONSTRUCTION. THE CONTRACTOR IS TO UTILIZE A THIRD PARTY STRUCTURAL ENGINEER TO PROVIDE THE DESIGN AND DOCUMENTATION FOR TEMPORARY BRACING, FORMWORK, SUPPORTS AND SHORING.

D-02 ALL EXISTING FOUNDATIONS AND FRAMING SHOWN ON THE STRUCTURAL CONTRACT DRAWINGS ARE INDICATED FOR REFERENCE ONLY AND ARE TO BE FIELD VERIFIED BY THE CONTRACTOR. NOTIFY THE ENGINEER OF ANY DISCREPANCIES BETWEEN THE EXISTING CONDITIONS AND THOSE SHOWN ON THE STRUCTURAL CONTRACT DOCUMENTS. EXISTING STRUCTURAL FRAMING AND FOUNDATIONS SHOWN ARE BASED ON FIELD VERIFICATION OF VISIBLE ELEMENTS.

POST-INSTALLED ADHESIVE/MECHANICAL ANCHORS

A-01 POST-INSTALLED ANCHORS ARE TO BE USED ONLY WHERE INDICATED ON THE STRUCTURAL DRAWINGS. THE CONTRACTOR IS TO SUBMIT ANY PROPOSED POST-INSTALLED ANCHORAGE NOT SHOWN ON THE CONTRACT DOCUMENT TO THE ENGINEER FOR REVIEW.

A-02 ALL POST-INSTALLED ANCHORS ARE TO BE INSTALLED AS INDICATED BY THE STRUCTURAL DRAWINGS AND IN STRICT ACCORDANCE WITH THE ANCHOR MANUFACTURER'S INSTRUCTIONS.

A-03 THE BASIS OF DESIGN FOR MECHANICAL ANCHORS ARE THE FOLLOWING PRODUCTS:
HILTI KWIK BOLT TZ2 EXPANSION ANCHOR WITH SAFESET SYSTEM; SIMPSON STRONG-TIE TITEN HD SCREW ANCHOR; DEWALT POWER-STUD+SD1

A-04 THE BASIS OF DESIGN FOR ADHESIVES/EPOXY ARE THE FOLLOWING PRODUCTS:
HILTI HIT-HY200 V3 OR HILTI-RE 500 V3 WITH SAFESET SYSTEM; SIMPSON STRONG-TIE SET-3G; DEWALT AC100+GOLD

A-05 THE CONTRACTOR MAY SUBMIT ALTERNATIVE MECHANICAL ANCHORS AND ADHESIVES/EPOXY THAT MEET OR EXCEED THE PROPERTIES AND LOAD CARRYING CAPACITIES OF THE BASIS OF DESIGN PRODUCTS TO THE ENGINEER FOR REVIEW.

A-06 PRIOR TO THE INSTALLATION OF ANY POST-INSTALLED ANCHORS, THE CONTRACTOR IS TO LOCATE ALL REINFORCING STEEL WITHIN STRUCTURAL ELEMENTS USING NON-DESTRUCTIVE METHODS. IF ANCHOR LOCATIONS ARE IN CONFLICT WITH ANY REINFORCING STEEL NOTIFY THE ENGINEER FOR DIRECTION.

CONCRETE AND REINFORCING STEEL

C-01 CONCRETE TO MEET THE FOLLOWING 28 DAY COMPRESSIVE STRENGTHS (F'C):

INTERIOR SLABS ON GRADE	3,000 PSI, NORMAL WEIGHT
FOOTINGS	4,000 PSI, NORMAL WEIGHT
FOUNDATION WALLS	4,000 PSI, NORMAL WEIGHT
GROUT	5,000 PSI, NON-SHRINK, NON-METALLIC

C-02 PROVIDE CLEAR COVER ON REINFORCING STEEL PER ACI 318 AND AS INDICATED BELOW:

CONVENTIONALLY REINFORCED CONCRETE	
CONCRETE CAST AGAINST AND EXPOSED TO EARTH	3"
CONCRETE EXPOSED TO EARTH AND WEATHER*	2" FOR BARS #6 AND LARGER 1 ½" FOR BARS SMALLER THAN #6
CONCRETE NOT EXPOSED TO EARTH AND WEATHER	¾" FOR SLABS AND WALLS 1 ½" FOR BEAMS AND COLUMNS

*NOTE: 'EXPOSED TO WEATHER' INCLUDES CONCRETE SURFACES PERMANENTLY EXPOSED TO THE ELEMENTS. CONCRETE SURFACES SUCH AS ROOF SLABS THAT ARE COVERED WITH PROTECTIVE SYSTEMS ARE NOT CONSIDERED TO BE EXPOSED TO WEATHER.

C-03 DETAIL, FABRICATE AND INSTALL ALL REINFORCING STEEL PER STRUCTURAL CONTRACT DOCUMENTS. ACI-318 AND ACI-315.

C-04 DO NOT WELD REINFORCING STEEL UNLESS SPECIFICALLY INDICATED ON STRUCTURAL CONTRACT DOCUMENTS.

C-05 EMBEDDED ITEMS SUCH AS ANCHOR BOLTS, REINFORCING STEEL DOWELS, AND EMBED PLATES ARE TO BE SET AND SECURED IN PLACE PRIOR TO THE PLACEMENT OF CONCRETE. 'WET SETTING' OF EMBEDDED ITEMS IS NOT ACCEPTABLE.

C-06 CLAY BRICK, ROCKS, WOOD, OR CMU BRICK ARE NOT TO BE USED TO SUPPORT REINFORCING STEEL IN FOOTINGS OR SLABS ON GRADE.

C-07 DOWELS EXTENDING FROM CONCRETE ELEMENTS SHOULD MATCH THE SIZE AND SPACING OF MAIN REINFORCING STEEL WHEN NOT SPECIFICALLY NOTED OTHERWISE. REQUIRED LAP LENGTHS FOR DOWELS AND MAIN REINFORCING STEEL IS TO BE PROVIDED PER THE TYPICAL SCHEDULES PROVIDED ON THE STRUCTURAL DRAWINGS.

C-08 LOCATE LAPS IN REINFORCING STEEL AS FOLLOWS, UNLESS SPECIFICALLY NOTED OTHERWISE:
CONTINUOUS FOOTINGS - AT CONTRACTOR'S PREFERENCE
WALL HORIZONTAL REINFORCING – AT CONTRACTOR'S PREFERENCE
WALL VERTICAL REINFORCING – AS INDICATED ON SECTIONS AND DETAILS

C-09 FOLLOW STRUCTURAL DRAWINGS FOR ACCEPTABLE INSTALLATION OF PLUMBING, ELECTRICAL, TELECOMMUNICATION, MECHANICAL OR OTHER UTILITY LINES AND CONDUIT THROUGH AND WITHIN CONCRETE ELEMENTS. THE CONTRACTOR IS TO NOTIFY THE DESIGN TEAM OF ANY CONDITIONS THAT DO NOT COMPLY WITH DETAILS SHOWN ON THE STRUCTURAL DRAWINGS.

C-10 HORIZONTAL CONSTRUCTION JOINTS IN CONCRETE ELEMENTS ARE NOT ACCEPTABLE WITHOUT PRIOR APPROVAL OF THE ENGINEER.

C-11 THE CONTRACTOR IS TO PROVIDE VERTICAL CONSTRUCTION JOINTS AS NECESSARY TO ENSURE THE QUALITY AND FINISH OF CONCRETE SATISFIES THE PROJECT SPECIFICATIONS. THE CONTRACTOR'S PROPOSED CONSTRUCTION JOINT LOCATIONS ARE TO BE SUBMITTED TO THE ENGINEER FOR REVIEW PRIOR TO CONCRETE PLACEMENT. REFER TO TYPICAL CONSTRUCTION JOINT DETAILS FOR ADDITIONAL REINFORCING, KEYWAYS AND OTHER REQUIREMENTS.

CONCRETE MASONRY (CMU)

M-01 MASONRY ASSEMBLY 28 DAY COMPRESSIVE STRENGTH (F'M):	1,500 PSI
CONCRETE MASONRY UNIT COMPRESSIVE STRENGTH:	1,900 PSI
MASONRY GROUT, TYPE S, 28 DAY COMPRESSIVE STRENGTH:	2,000 PSI

M-02 DETAIL, FABRICATE AND INSTALL ALL REINFORCING STEEL PER STRUCTURAL CONTRACT DOCUMENTS AND ACI-530.01.

M-03 EMBEDDED ITEMS SUCH AS ANCHOR BOLTS, REINFORCING STEEL DOWELS, AND EMBED PLATES ARE TO BE SET AND SECURED IN PLACE PRIOR TO GROUTING MASONRY UNITS. 'WET SETTING' EMBEDDED ITEMS IS NOT ACCEPTABLE.

M-04 DOWELS EXTENDING FROM CONCRETE ELEMENTS INTO MASONRY SHOULD MATCH THE SIZE AND SPACING OF MAIN REINFORCING STEEL WHEN NOT SPECIFICALLY NOTED OTHERWISE. REQUIRED LAP LENGTHS FOR DOWELS AND MAIN REINFORCING STEEL IS TO BE PROVIDED PER THE TYPICAL SCHEDULES PROVIDED ON THE STRUCTURAL DRAWINGS.

M-05 WALLS, PEDESTALS AND PIERS BELOW GRADE ARE TO HAVE ALL CELLS OF MASONRY UNITS GROUTED SOLID.

M-06 ALL WALLS, PEDESTALS AND PIERS ABOVE GRADE ARE TO HAVE ONLY REINFORCED CELLS OF MASONRY UNITS GROUTED SOLID UNLESS SPECIFICALLY NOTED OTHERWISE ON STRUCTURAL DETAILS.

M-07 FOLLOW STRUCTURAL DRAWINGS FOR ACCEPTABLE INSTALLATION OF PLUMBING, ELECTRICAL, TELECOMMUNICATION, MECHANICAL OR OTHER UTILITY LINES AND CONDUIT THROUGH AND WITHIN CONCRETE MASONRY ELEMENTS. THE CONTRACTOR IS TO NOTIFY THE DESIGN TEAM OF ANY CONDITIONS THAT DO NOT COMPLY WITH DETAILS SHOWN ON THE STRUCTURAL DRAWINGS.

FOUNDATIONS

F-01 FOOTINGS ARE TO BE FOUNDED AT A DEPTH PROVIDING THE DESIGN BEARING CAPACITY AND AT AN ELEVATION WHERE THE TOP OF THE FOOTING IS BELOW THE FROST PENETRATION DEPTH AS DICTATED BY THE BUILDING CODE BUT NO LESS THAN 12" BELOW THE FINAL FINISHED GRADE. THE CONTRACTOR IS TO COMPARE THE TOP OF FOOTING ELEVATIONS INDICATED ON THE STRUCTURAL DRAWINGS WITH THE FINAL GRADE INDICATED ON THE CIVIL/LANDSCAPE ARCHITECTURAL DRAWINGS AND NOTIFY THE DESIGN TEAM OF ANY DISCREPANCIES PRIOR TO THE START OF CONSTRUCTION.

F-02 THE CONTRACTOR IS RESPONSIBLE TO ADEQUATELY PROTECT ALL EXCAVATIONS. WHERE REQUIRED, SHORE THE EXCAVATIONS WITH SYSTEMS DESIGNED AND DETAILED BY THE CONTRACTOR'S ENGINEER.

F-03 UNLESS SPECIFICALLY NOTED ON THE STRUCTURAL DRAWINGS, ALL FOUNDATION WALLS AND BASEMENT WALLS ARE TO BE TEMPORARILY BRACED BY THE CONTRACTOR DURING BACKFILL OPERATIONS AND UNTIL SLABS AT TOP OF WALLS HAVE BEEN INSTALLED AND HAVE REACHED DESIGN STRENGTH OR ARE AT LEAST 7 DAYS OLD.

F-04 FOLLOW STRUCTURAL DRAWINGS FOR ACCEPTABLE INSTALLATION OF PLUMBING, ELECTRICAL, TELECOMMUNICATION, MECHANICAL OR OTHER UTILITY LINES UNDER AND THROUGH FOUNDATION ELEMENTS. THE CONTRACTOR IS TO NOTIFY THE DESIGN TEAM OF ANY CONDITIONS THAT DO NOT COMPLY WITH DETAILS SHOWN ON THE STRUCTURAL DRAWINGS.

STRUCTURAL STEEL

S-01 STEEL PROPERTIES:

ANGLES, BARS, RODS:	A36 (FY=36 KSI)
PLATE:	A36 (FY=36 KSI) AND A572, GRADE 50 (50 KSI) WHERE INDICATED
ANCHOR BOLTS:	F1554, GRADE 36

S-02 DESIGN, DETAIL, FABRICATE AND ERECT STRUCTURAL STEEL PER STRUCTURAL CONTRACT DOCUMENTS AND AISC 360-05 AND AISC 325-05.

S-03 WELD ELECTRODES: E70XX. PERFORM ALL WELDING PER AWS D1.1-4.

S-04 ALL STEEL MEMBER CONNECTIONS ARE TO BE DESIGNED BY THE FABRICATOR'S ENGINEER FOR THE LOADS INDICATED. WHEN SPECIFIC REACTIONS ARE NOT PROVIDED ON PLANS OR BY NOTE, CONNECTIONS ARE TO BE DESIGNED FOR THE MAXIMUM ALLOWABLE UNIFORM LOADS AS DETERMINED BY PART 3 OF THE AISC MANUAL OF STEEL CONSTRUCTION FOR THE SECTION, SPAN AND STRENGTH SPECIFIED.

S-05 UNLESS SPECIFICALLY INDICATED, SPLICED STRUCTURAL STEEL MEMBERS ARE NOT ACCEPTABLE. ALL PROPOSED SPLICES MUST BE SUBMITTED TO THE ENGINEER FOR REVIEW PRIOR TO CONSTRUCTION.

S-06 FIELD MODIFICATION OF STRUCTURAL STEEL MEMBERS AND THEIR CONNECTIONS IS PROHIBITED UNLESS THE PROPOSED MODIFICATIONS HAVE BEEN REVIEWED BY THE ENGINEER.

S-07 REFER TO ARCHITECTURAL, MECHANICAL, ELECTRICAL AND PLUMBING DRAWINGS FOR BLOCK, CLIPS, TABS AND OTHER ATTACHMENTS REQUIRED. SHOW ALL ITEMS ON STRUCTURAL STEEL SHOP DRAWINGS.

S-08 FOLLOW STRUCTURAL DRAWINGS FOR ACCEPTABLE OPENINGS, HOLES AND SPECIAL COPING OF STRUCTURAL STEEL MEMBERS REQUIRED FOR THE INSTALLATION OF PLUMBING, ELECTRICAL, TELECOMMUNICATION, MECHANICAL OR OTHER UTILITY LINES AND CONDUIT THROUGH STEEL MEMBERS. THE CONTRACTOR IS TO NOTIFY THE DESIGN TEAM OF ANY CONDITIONS THAT DO NOT COMPLY WITH DETAILS SHOWN ON THE STRUCTURAL DRAWINGS.

ABBREVIATIONS

@	AT	HD	HEADED
&	AND	HORZ	HORIZONTAL
#	NUMBER	INT	INTERIOR
AB	ANCHOR BOLTS	INFO	INFORMATION
ADDL	ADDITIONAL	JT	JOINT
AFF	ABOVE FINISHED FLOOR	K	KIPS
ALT	ALTERNATE	KSI	KIPS PER SQUARE INCH
ARCH	ARCHITECT / ARCHITECTURAL	LBS	POUNDS
BOT	BOTTOM	LLH	LONG LEG HORIZONTAL
BCX	BOTTOM CHORD EXTENSION	LLV	LONG LEG VERTICAL
BLDG	BUILDING	LWC	LIGHTWEIGHT CONCRETE
BOS	BOTTOM OF STEEL	MAX	MAXIMUM
BRG	BEARING	MC	MOMENT CONNECTION
BTWN	BETWEEN	MECH	MECHANICAL
CANT	CANTILEVER	MEP	MECHANICAL, ELECTRICAL, PLUMBING
CJ	CONTROL JOINT	MFR	MANUFACTURER
CL	CENTERLINE	MIN	MINIMUM
CLR	CLEAR	MISC	MISCELLANEOUS
CMU	CONCRETE MASONRY UNIT	MOW	MIDDLE OF WALL
COL	COLUMN	NS	NEAR SIDE
CONC	CONCRETE	NTS	NOT TO SCALE
CONN	CONNECTION	NWC	NORMAL WEIGHT CONCRETE
CONS	CONSTRUCTION	OC	ON CENTER
CONT	CONTINUOUS	OPNG	OPENING
CORD	COORDINATE	OPP	OPPOSITE HAND
CTRD	CENTERED	PAF	POWDER ACTUATED FASTENER
cl	PENNY (NAILS)	PARL	PARALLEL
DBA	DEFORMED BAR ANCHOR	PERP	PERPENDICULAR
DET	DETAIL	PL	PLATE
DIA	DIAMETER	PSF	POUNDS PER SQAURE FOOT
DIM	DIMENSION	PSI	POUNDS PER SQAURE INCH
DIST	DISTANCE	PT	PRESSURE TREATED
DN	DOWN	P-T	POST TENSIONED
DWG	DRAWING	REF	REFERENCE
DWL	DOWEL	REIN	REINFORCING
EA	EACH	REQD	REQUIRED
EE	EACH END	SCH	SCHEDULE
EF	EACH FACE	SIM	SIMILAR
EJ	EXPANSION JOINT	SOG	SLAB ON GRADE
ELEV	ELEVATION	SPEC	SPECIFICATION(S)
EMBD	EMBEDDED / EMBEDMENT	SQ	SQUARE
ENGR	ENGINEER	STD	STANDARD
EOD	EDGE OF DECK	STIF	STIFFENER
EOS	EDGE OF SLAB	STIR	STIRRUP(S)
EQL	EQUAL	STL	STEEL
EW	EACH WAY	TCX	TOP CHORD EXTENSION
EXST	EXISTING	THRU	THROUGH
EXP	EXPANSION	TOC	TOP OF CONCRETE
EXT	EXTERIOR	TOF	TOP OF FOOTING
FDN	FOUNDATION	TOS	TOP OF STEEL
FFE	FINISHED FLOOR ELEVATION	TOW	TOP OF WALL
FOW	FACE OF WALL	TYP	TYPICAL
FRT	FIRE RETARDANT TREATED	UNO	UNLESS NOTED OTHERWISE
FS	FAR SIDE	VERT	VERTICAL
FTG	FOOTING	VIF	VERIFY IN FIELD
GA	GAUGE	W/	WITH
GALV	GALVANIZED	WP	WORK POINT

OAKLEY COLLIER ARCHITECTS
OCA
109 Candlewood Road, Rocky Mount, NC 27804 (P) 252.937.2500
205 W. Martin Street, Raleigh, NC 27601

RENOVATION FOR:
CRAVEN COUNTY GOVERNMENT CENTER EAST
CRAVEN COUNTY
1208 E. MAIN STREET, HAVELOCK, NORTH CAROLINA 28532

SCALENE DESIGN
FUNCTION · STRUCTURE · FORM
421 N HARRINGTON ST. SUITE 440 RALEIGH, NC 27603 919.825.0295
FIRM LICENSE #P-1591 SCALENE DESIGN PROJECT NO: 526-024.00

NORTH CAROLINA PROFESSIONAL SEAL 026890 ENGINEER ROBERT T. MACIA

05/26/2026
THIS DOCUMENT WAS ELECTRONICALLY SIGNED BY ROBERT T. MACIA

GENERAL NOTE:
Prior to construction start. Contractor shall verify & be responsible for all Dimensions.

Revisions

#	Description	Date

Date 05/26/2026	Project No. 25012
Drawn By LS	Sheet No. S001
Checked By RM	

Sheet Title
GENERAL NOTES & ABBREVIATIONS

Copyright © 2025 Oakley Collier Architects. These drawings are of the property of the Architect for use under his supervision. No reproduction or other use is allowed without permission.

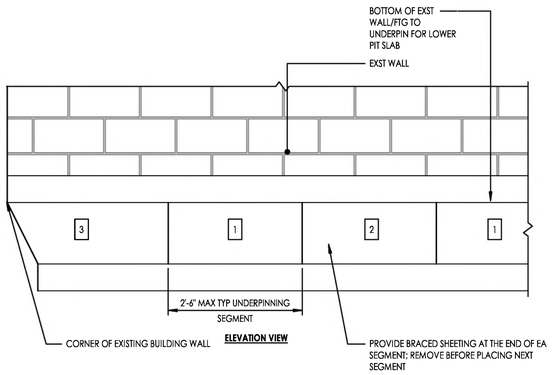

UNDERPINNING SEQUENCE:

1. EXCAVATE, SHEET, PLACE UNDERPINNIG AND DRYPACK AT PIERS MARKED 1; LEAVE SOIL IN PLACE AT OTHER LOCATIONS.
2. REPEAT STEP 1 FOR PIERS MARKED 2.
3. REPEAT STEP 1 FOR PIERS MARKED 3.

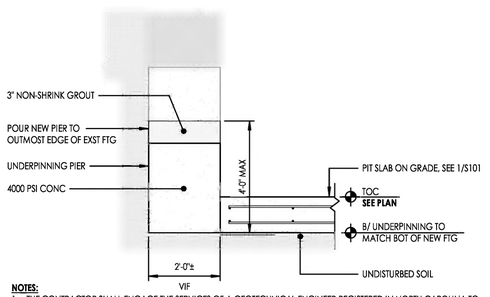

NOTES:

1. THE CONTRACTOR SHALL ENGAGE THE SERVICES OF A GEOTECHNICAL ENGINEER REGISTERED IN NORTH CAROLINA TO SUPERVISE THE EXCAVATION OPERATION.
2. EXCAVATE UNDERPINNING PIERS LABELED ON PLAN VIEW, AS SHOWN ON DETAIL. EXCAVATE TO LOWER ELEVATION IF REQUIRED AS DIRECTED BY THE GEOTECHNICAL ENGINEER. ASSUMED BEARING PRESSURE IS 2000PSF MIN.
3. ALL EXCAVATION IS TO TAKE PLACE FROM GRADE. AT NO TIME SHALL ANYONE BE IN THE OPEN EXCAVATION.
4. THOROUGHLY CLEAN BOTTOM OF EXISTING FOOTING. FORM FRONT OF EXCAVATION WITH PLYWOOD PANEL AND POUR PIER SOLID WITH 4000PSI HIGH EARLY STRENGTH CONCRETE TO 3" FROM UNDERSIDE OF EXISTING WALL FOOTING.
5. CONSTRUCT WITHIN 24 HOURS OF CUT EXCAVATION.
6. ALLOW 24 HOURS OF CURING TIME BEFORE FILLING 3" SPACE WITH NON-SHRINK, NON-METALLIC HIGH STRENGTH GROUT.
7. ALLOW 24 HOURS OF CURING TIME BEFORE PROCEEDING TO NEXT UNDERPINNING PIER LABELED ON PLAN.
8. REPEAT PROCEDURE FOR NEXT UNDERPINNING PIER LABELED ON PLAN.
9. MONITOR WALL WITH A TRANSIT DURING CONSTRUCTION FOR POSSIBLE MOVEMENT.
10. CONTRACTOR TO SUBMIT CONCRETE MIX DESIGN FOR APPROVAL.

6 UNDERPINNING EXCAVATION
3/4" = 1'-0"

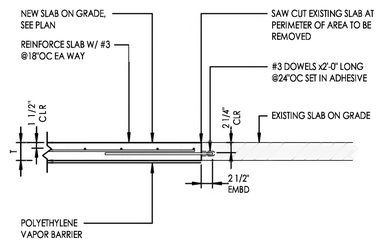

3 SLAB ON GRADE TO EXISTING SLAB
3/4" = 1'-0"

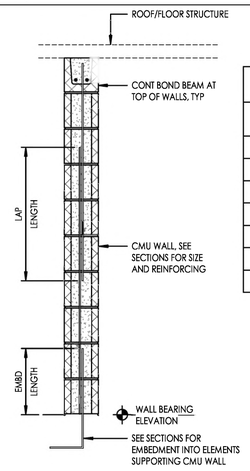

CMU REINFORCING LAP AND EMBEDMENT SCHEDULE

BAR SIZE	LAP LENGTH	EMBEDMENT LENGTH
#3	28"	16"
#4	36"	20"
#5	48"	28"
#6	56"	32"
#7	64"	36"
#8	72"	40"
#9	84"	48"

NOTES:

1. THIS SCHEDULE APPLIES TO REINFORCED CMU WALLS WHICH ARE BRACED/CONNECTED TO FLOORS OR ROOF AT THE TOP OF THE WALL. LAPS AND EMBEDMENT LENGTHS FOR CANTILEVERED CMU WALLS ARE NOT TO BE DETERMINED USING THIS SCHEDULE.

4 MINIMUM LAP AND EMBEDMENT LENGTH SCHEDULE
3/4" = 1'-0"

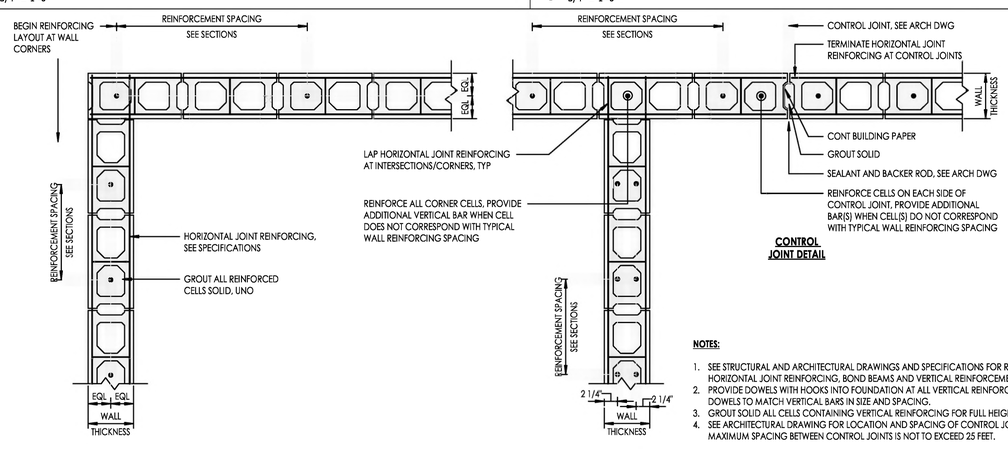

NOTES:

1. SEE STRUCTURAL AND ARCHITECTURAL DRAWINGS AND SPECIFICATIONS FOR REQUIRED HORIZONTAL JOINT REINFORCING, BOND BEAMS AND VERTICAL REINFORCEMENT.
2. PROVIDE DOWELS WITH HOOKS INTO FOUNDATION AT ALL VERTICAL REINFORCEMENT. DOWELS TO MATCH VERTICAL BARS IN SIZE AND SPACING.
3. GROUT SOLID ALL CELLS CONTAINING VERTICAL REINFORCING FOR FULL HEIGHT OF WALL.
4. SEE ARCHITECTURAL DRAWING FOR LOCATION AND SPACING OF CONTROL JOINTS. MAXIMUM SPACING BETWEEN CONTROL JOINTS IS NOT TO EXCEED 25 FEET.

5 TYPICAL CMU WALL REINFORCING
1" = 1'-0"

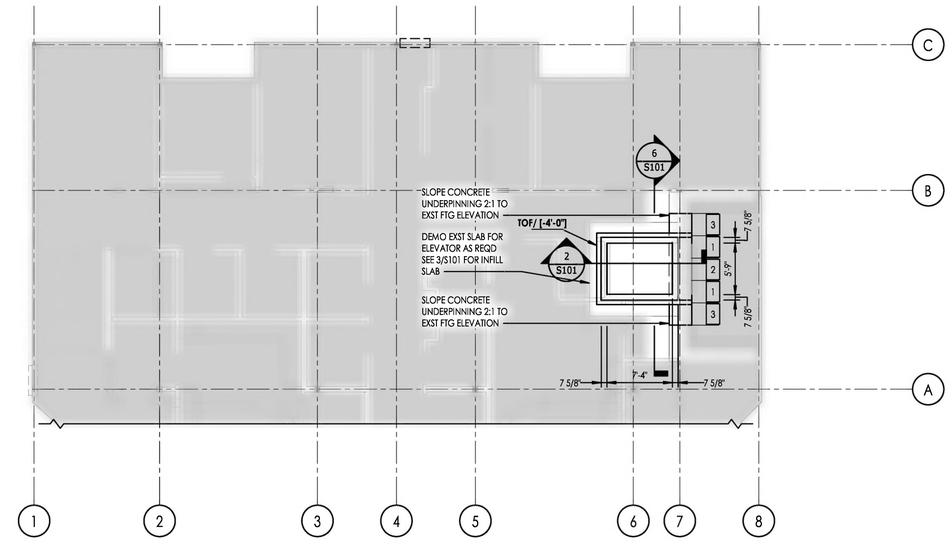

1 FOUNDATION PLAN
1/8" = 1'-0"

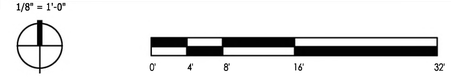

NOTES:

1. SEE S001 FOR GENERAL STRUCTURAL NOTES AND ABBREVIATION LEGEND.
2. TOP OF SLAB ELEVATION = 0'-0" UNLESS NOTED OTHERWISE
3. EXISTING STRUCTURE INDICATED WAS DETERMINED BY FIELD INVESTIGATIONS. CONTRACTOR TO VERIFY ALL EXISTING CONDITIONS.
4. SEE THIS SHEET FOR SLAB CONSTRUCTION DETAILS.
5. **[xxx'-xx"]** INDICATES TOP OF FOOTING ELEVATION FROM EXISTING SLAB ON GRADE ELEVATION
6. FOOTINGS ARE TO BE CENTERED ON WALLS AND COLUMNS UNLESS NOTED OTHERWISE.
7. DETERMINE LOCATIONS OF ALL FLOOR DRAINS, SLOPES TO DRAINS, AND SLAB DEPRESSIONS FROM ARCHITECTURAL DRAWINGS.
8. SEE THIS SHEET FOR MISCELLANEOUS TYPICAL FOUNDATION DETAILS.

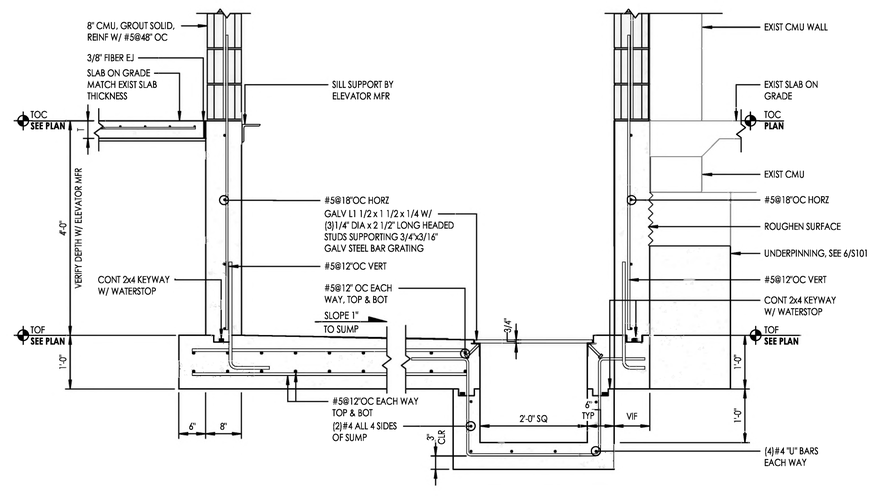

2 SECTION
3/4" = 1'-0"

Copyright © 2025 Oakley Collier Architects. These drawings are of the property of the Architect for use under his supervision. No reproduction or other use is allowed without permission.

OAKLEY COLLIER ARCHITECTS
OCA
109 Candlewood Road, Rocky Mount, NC 27804 (P) 252.937.2500
205 W. Martin Street, Raleigh, NC 27601

RENOVATION FOR:
CRAVEN COUNTY GOVERNMENT CENTER EAST
CRAVEN COUNTY
1208 E. MAIN STREET, HAVELOCK, NORTH CAROLINA 28532

SCALENE DESIGN
FUNCTION • STRUCTURE • FORM
421 N HARRINGTON ST. SUITE 440 RALEIGH, NC 27603 919.835.0395
FIRM LICENSE #P-1591 SCALENE DESIGN PROJECT NO: 526-024.00

NORTH CAROLINA PROFESSIONAL SEAL 026690 ENGINEER ROBERT T. MACIA
05/26/2026
THIS DOCUMENT WAS ELECTRONICALLY SIGNED BY ROBERT T MACIA

GENERAL NOTE:
Prior to construction start. Contractor shall verify & be responsible for all Dimensions.

Revisions

#	Description	Date

Date	Project No.
05/26/2026	25012
Drawn By: LS	Sheet No. S101
Checked By: RM	

Sheet Title: FOUNDATION PLAN

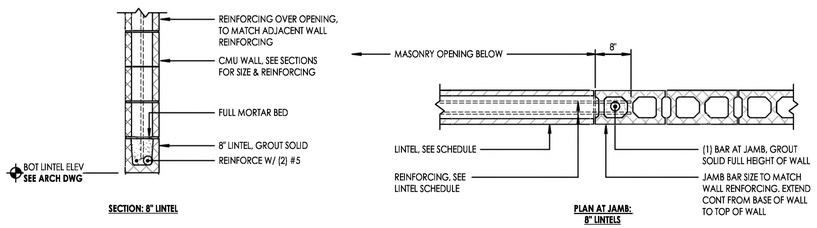

4 CMU LINTEL SCHEDULE - LOAD BEARING
3/4" = 1'-0"

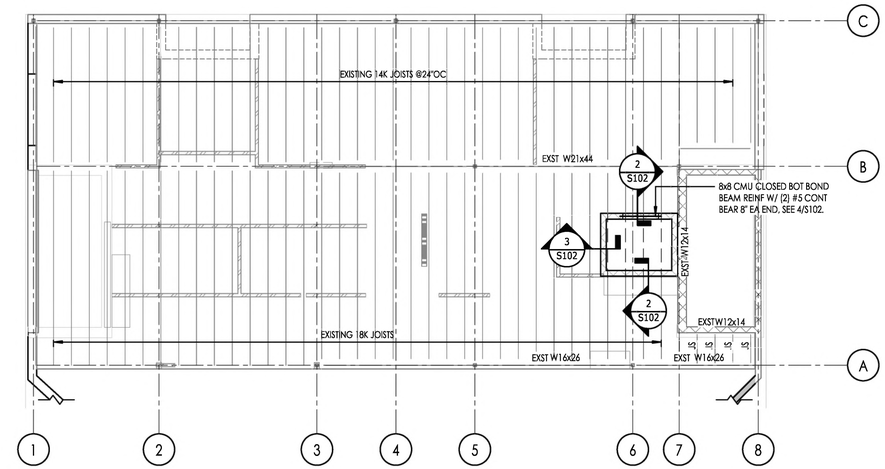

1 2ND FLOOR FRAMING PLAN
1/8" = 1'-0"

0' 4' 8' 16' 32'

NOTES:

1. SEE S001 FOR STRUCTURAL GENERAL NOTES AND ABBREVIATION LEGEND.
2. TOP OF SLAB ELEVATION = 13'-8" UNLESS NOTED OTHERWISE. FIELD VERIFY PRIOR TO CONSTRUCTION.
3. CONTRACTOR TO VERIFY ALL EXISTING CONDITIONS.
4. SEE S101 FOR WALL REINFORCING.

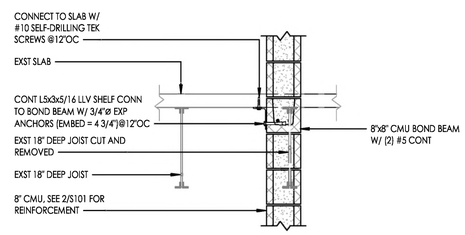

3 SECTION
3/4" = 1'-0"

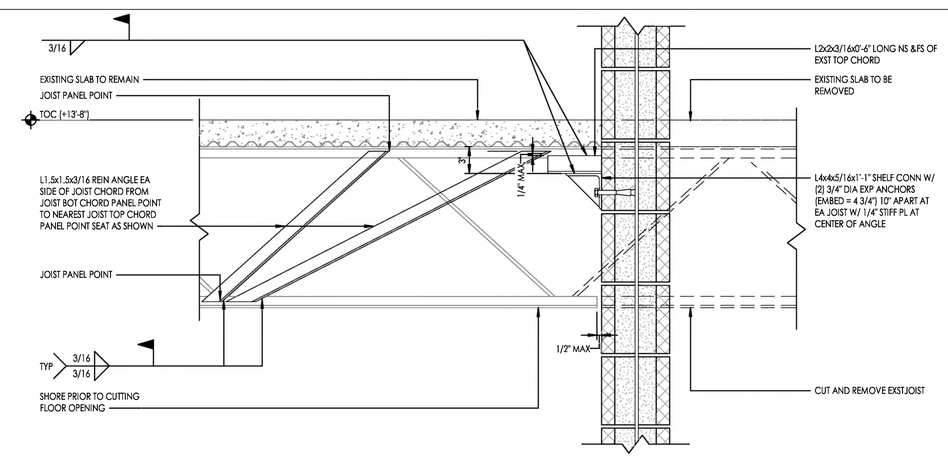

2 SECTION
1 1/2" = 1'-0"

OAKLEY COLLIER ARCHITECTS
OCA
109 Candlewood Road, Rocky Mount, NC 27804 (P) 252.937.2500
205 W. Martin Street, Raleigh, NC 27601

RENOVATION FOR:
CRAVEN COUNTY GOVERNMENT CENTER EAST
CRAVEN COUNTY
1208 E. MAIN STREET, HAVELOCK, NORTH CAROLINA 28532

SCALENE DESIGN
FUNCTION • STRUCTURE • FORM
421 N HARRINGTON ST. SUITE 440 RALEIGH, NC 27603 919.825.0293
FIRM LICENSE #P-1591 SCALENE DESIGN PROJECT NO: S26-024.00

NORTH CAROLINA PROFESSIONAL SEAL 026890 ENGINEER ROBERT T. MACIA

05/26/2026
THIS DOCUMENT WAS ELECTRONICALLY SIGNED BY ROBERT T MACIA

GENERAL NOTE:
Prior to construction start. Contractor shall verify & be responsible for all Dimensions.

Revisions

#	Description	Date

Date 05/26/2026	Project No. 25012
Drawn By LS	Sheet No. S102
Checked By RM	

Sheet Title
2ND FLOOR FRAMING PLAN

Copyright © 2025 Oakley Collier Architects. These drawings are of the property of the Architect for use under his supervision. No reproduction or other use is allowed without permission.

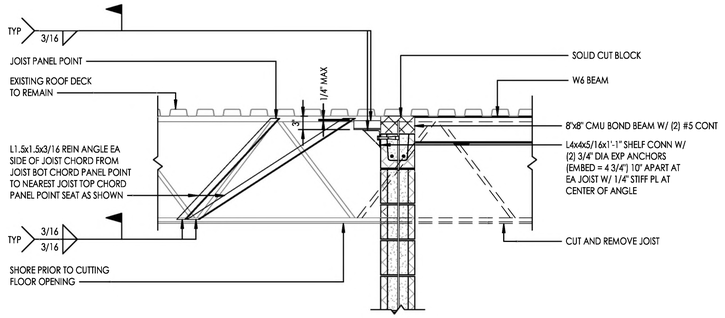

3 SECTION
3/4" = 1'-0"

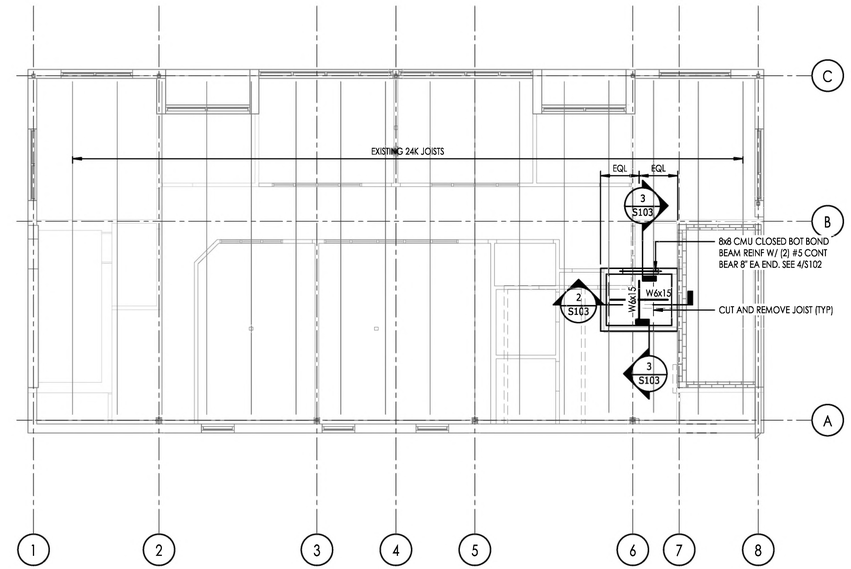

1 ROOF FRAMING PLAN
1/8" = 1'-0"

0' 4' 8' 16' 32'

NOTES:

1. SEE S001 FOR STRUCTURAL GENERAL NOTES AND ABBREVIATION LEGEND.
2. TOP OF METAL DECK ELEVATION = 27'-4" UNLESS NOTED OTEHRWISE.
3. CONTRACTOR TO VERIFY ALL EXISTING CONDITIONS.
4. SEE THIS SHEET FOR MISCELLANEOUS TYPICAL ROOF FRAMING DETAILS.
5. SEE S101 FOR WALL REINFORCING KEY PLAN.

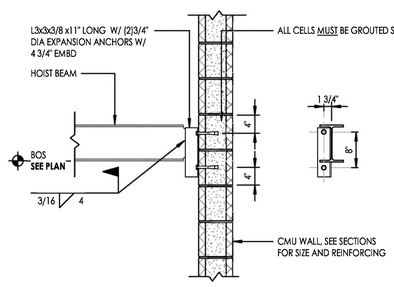

4 BEAM CONNECTION TO CMU WALL
3/4" = 1'-0"

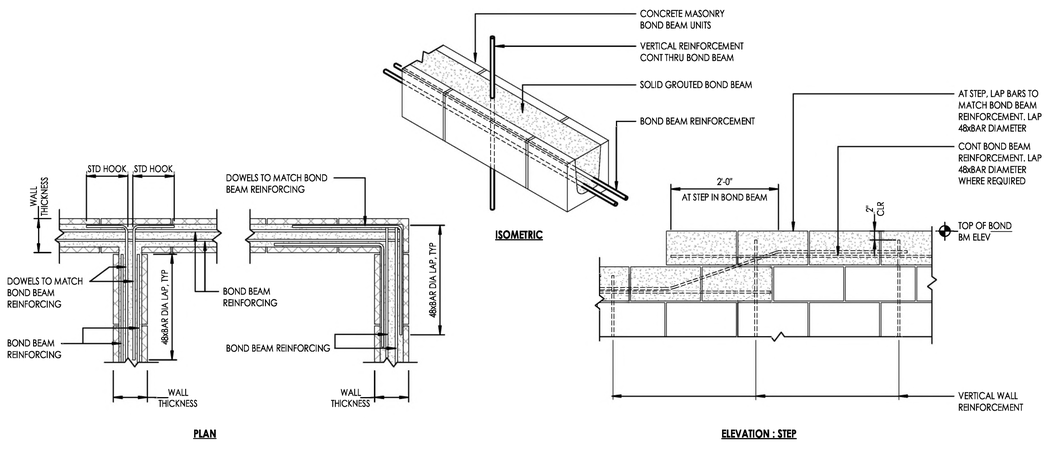

5 CMU BOND BEAM DETAILS
3/4" = 1'-0"

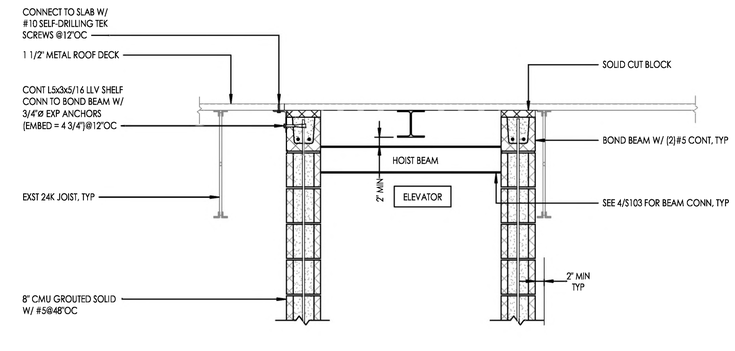

2 CMU ELEVATOR SHAFT
3/4" = 1'-0"

Copyright © 2025 Oakley Collier Architects. These drawings are of the property of the Architect for use under his supervision. No reproduction or other use is allowed without permission.

OAKLEY COLLIER ARCHITECTS
OCA
109 Candlewood Road, Rocky Mount, NC 27804 (P) 252.937.2500
205 W. Martin Street, Raleigh, NC 27601

RENOVATION FOR:
CRAVEN COUNTY CENTER EAST
CRAVEN COUNTY
1208 E. MAIN STREET, HAVELOCK, NORTH CAROLINA 28532

SCALENE DESIGN
FUNCTION • STRUCTURE • FORM
421 N HARRINGTON ST.
SUITE 440
RALEIGH, NC 27603
919.825.0595
FIRM LICENSE #P-1591
SCALENE DESIGN
PROJECT NO:
S26-0224.00

NORTH CAROLINA PROFESSIONAL SEAL 026690 ENGINEER ROBERT T. MACIA

05/26/2026
THIS DOCUMENT WAS ELECTRONICALLY SIGNED BY ROBERT T MACIA

GENERAL NOTE:
Prior to construction start. Contractor shall verify & be responsible for all Dimensions.

Revisions		
#	Description	Date

Date 05/26/2026	Project No. 25012
Drawn By LS	Sheet No. S103
Checked By RM	Sheet Title ROOF FRAMING PLAN

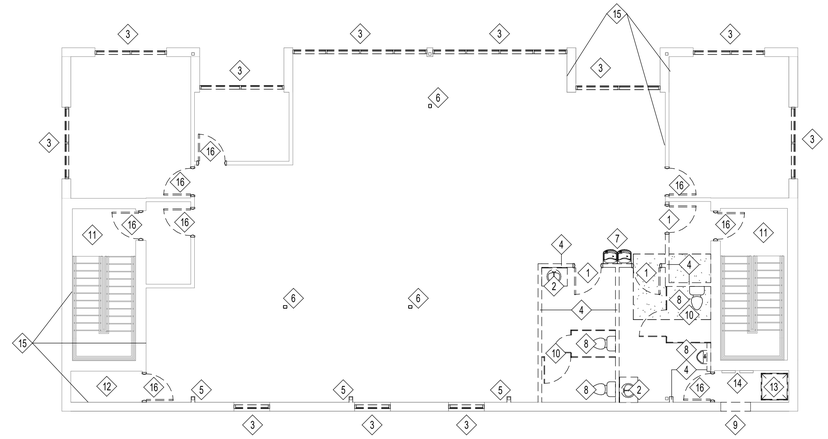

1 D1.1 SECOND FLOOR DEMOLITION PLAN

1/8" = 1'-0"

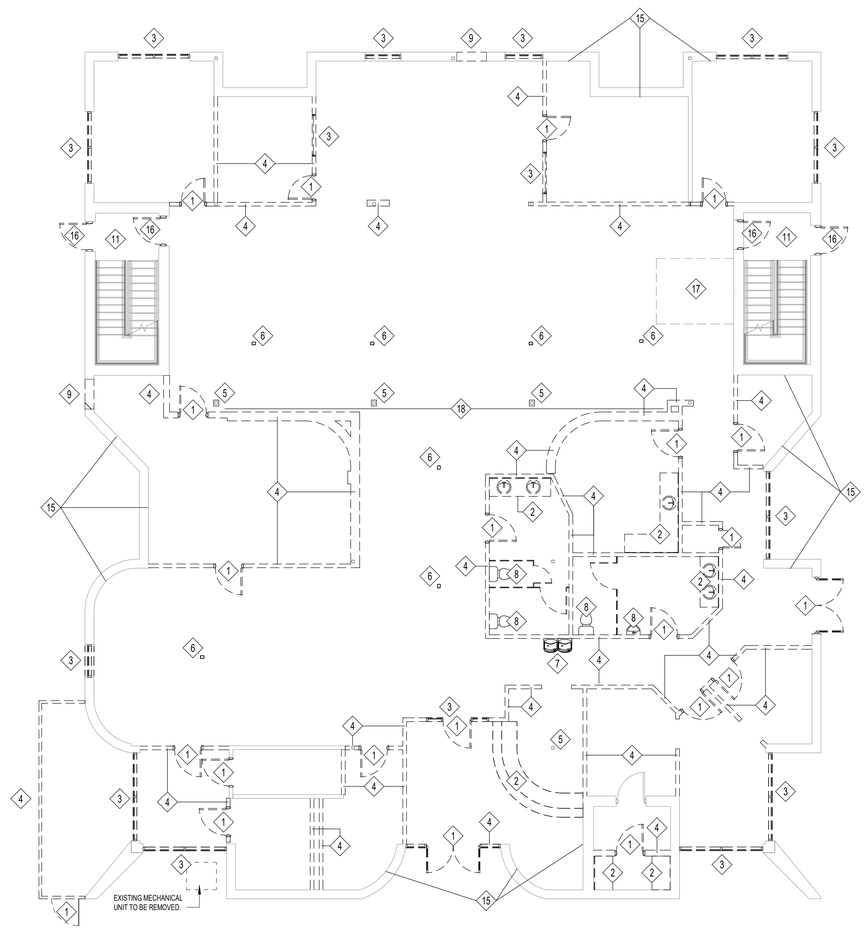

2 D1.1 FIRST FLOOR DEMOLITION PLAN

1/8" = 1'-0"

DEMOLITION LEGEND

2X2 EXISTING LAY-IN CEILING TO REMAIN	EXISTING BUILDING TO REMAIN
2X2 EXISTING LAY IN CEILING WITHIN PROJECT SCOPE. DEMOLISH AND REPLACE ALL CEILING TILES.	DASHED LINE INDICATES WALL OR DOOR AND ALL ASSOCIATED COMPONENTS TO BE DEMOLISHED.
2X4 LIGHT FIXTURE TO BE RELOCATED	SOLID LINE INDICATES WALL, DOOR, OR CEILING TO REMAIN
SUPPLY DIFFUSER TO BE RELOCATED	# DEMOLITION KEYNOTE TAG

DEMOLITION NOTES

A. FIELD VERIFY ALL EXISTING CONSTRUCTION CONDITIONS AND FINISHES PRIOR TO SUBMITTING A BID AND START OF ANY WORK. DISCREPANCIES IN ACTUAL CONDITIONS AND PLANS SHALL BE BROUGHT TO THE ATTENTION OF THE ARCHITECT AND/OR ENGINEER FOR EVALUATION BEFORE SUBMITTING BID AND/OR CONTINUING WITH WORK.
B. FIELD VERIFY THE LOCATION OF ALL UTILITIES, INCLUDING BURIAL DEPTH, PRIOR TO START OF ANY WORK. CONDITIONS THAT PROHIBIT THE WORK FROM BEING PERFORMED AS SHOWN SHALL BE BROUGHT TO THE ATTENTION OF THE ARCHITECT AND/OR ENGINEER FOR EVALUATION BEFORE CONTINUING WITH WORK.
C. VERIFY WITH THE OWNER PRIOR TO THE START OF WORK THE EXTENT OF DEMOLITION ITEMS TO BE SALVAGED.
D. ITEMS NOT BEING SALVAGED SHALL BE TRANSPORTED AND DISPOSED OF IN A LEGAL MANNER IN ACCORDANCE WITH ALL APPLICABLE CODES.
E. ADDITIONAL DEMOLITION WORK ASSOCIATED WITH PLUMBING, MECHANICAL, AND ELECTRICAL WORK IS REQUIRED. COORDINATE WORK REQUIRED WITH ALL TRADES.
F. ALL DEMOLITION PLUMBING, MECHANICAL, AND ELECTRICAL WORK SHALL BE PERFORMED IN COMPLIANCE WITH ALL APPLICABLE CODES.
G. ALL DEMOLITION WORK SHALL BE COORDINATED AND BE PERFORMED IN ACCORDANCE WITH OWNER.
H. REMOVE, REPLACE AND/OR REINSTALL ALL EXISTING WALL MOUNTED DEVICE COVER PLATES INCLUDING SWITCHES, RECEPTACLES, OUTLETS, PANEL FACES, RECESSED CABINET FACES, ETC., AS REQUIRED FOR RENOVATION WORK AND PROPER INSTALLATION OF NEW FINISHES. FINISHING/PAINTING AROUND EXISTING NOTED ITEMS WILL NOT BE ACCEPTED.
I. SEE SPECIFICATIONS FOR ADDITIONAL DEMOLITION REQUIREMENTS.
J. CLEAN AND PREPARE ALL EXISTING SURFACES/SUBSTRATES TO REMAIN AS REQUIRED FOR PROPER INSTALLATION OF NEW FINISHES PER MANUFACTURER'S RECOMMENDATIONS.
K. CLEAN AND PREPARE EXISTING SUBSTRATE IN ALL AREAS RECEIVING NEW FLOOR FINISHES AS REQUIRED BY RENOVATION WORK AND FOR PROPER INSTALLATION OF NEW FINISHES PER MANUFACTURER'S RECOMMENDATIONS.
L. PERFORM DEMOLITION WORK IN A MANNER SO AS TO MINIMIZE DAMAGE TO EXISTING SURROUNDING ITEMS TO REMAIN.
M. PATCH ALL EXISTING FLOORS, WALLS, AND CEILINGS AS REQUIRED FOR DEMOLITION AND RENOVATION WORK INCLUDING ALL PLUMBING, MECHANICAL, AND ELECTRICAL WORK.
N. PATCH ALL EXISTING TO REMAIN FLOORS, WALLS, AND CEILINGS THAT ARE DAMAGED DURING THE COURSE OF DEMOLITION WORK INCLUDING ALL PLUMBING, MECHANICAL, AND ELECTRICAL DEMOLITION WORK.
O. FURNISH AND INSTALL FLOOR LEVELING COMPOUND AS NECESSARY TO ACHIEVE A SMOOTH AND MONOLITHIC APPEARANCE FOR PROPER INSTALLATION OF NEW FINISHES. NOTIFY ARCHITECT IN ADVANCE IF THE LEVELING COMPOUND SHALL CREATE ANY UNEVEN FLOOR TRANSITIONS.
P. CUT AND PATCH EXISTING WALLS AS NECESSARY FOR RENOVATION AND DEMOLITION WORK. WALLS SHALL BE PATCHED TO MATCH ADJACENT EXISTING SURFACES AND PROVIDE A SMOOTH AND SEAMLESS TRANSITION FROM NEW TO EXISTING.
Q. IT IS THE INTENT OF THESE DOCUMENTS THAT "PATCH" MEANS THAT THE EXISTING CONSTRUCTION SHALL BE REPAIRED IN A MANNER, WITH SAME OR SIMILAR MATERIALS, PROVIDING A SMOOTH AND SEAMLESS TRANSITION FROM NEW TO EXISTING MATERIALS AND THE PATCH SHALL BE PREPARED TO RECEIVE NEW FINISHES PER FINISH MANUFACTURER'S RECOMMENDATIONS.
R. IT IS THE INTENT OF THESE DOCUMENTS THAT "PREPARED" MEANS THAT THE EXISTING CONSTRUCTION SHALL BE MADE READY TO RECEIVE NEW FINISHES IN ACCORDANCE WITH FINISH MANUFACTURER'S RECOMMENDATIONS.
S. REMOVE ALL WINDOW TREATMENTS FROM ALL WINDOWS WITHIN LIMITS OF WORK AREA. PATCH AND REPAIR EXISTING CONSTRUCTION TO REMAIN AS NECESSARY.
T. REMOVE ALL DECORATIVE DOOR TRIM ELEMENTS FROM ALL DOORS WITHIN THE LIMITS OF THE WORK AREA AND REPAIR EXISTING CONSTRUCTION TO REMAIN AS NECESSARY.
U. REMOVE ALL MISCELLANEOUS OFFICE TYPE WALL MOUNTED ITEMS WITHIN THE LIMITS OF THE WORK AREA AND REPAIR EXISTING CONSTRUCTION TO REMAIN AS NECESSARY.
V. REMOVE ALL EXISTING EXTERIOR LIGHTING FIXTURES, CAMERAS, AND ALL SOFFITS AND FASCIAS.
W. PATCH AND REPAIR ANY EXISTING THROUGH-WALL VENTS THAT ARE NO LONGER NEEDED FOR NEW CONSTRUCTION.
X. REMOVE ALL EXISTING VINYL WALLCOVERING ON ALL FIRST & SECOND FLOOR WALLS THAT ARE TO REMAIN. PREP ALL EXISTING WALLS TO RECEIVE NEW PAINT PER THE FINISH SCHEDULE.
Y. REMOVE ALL EXISTING GYPSUM WALLBOARD ON EXISTING TO REMAIN EXTERIOR WALLS.

DEMOLITION KEYNOTES - FLOOR PLAN

1. REMOVE EXISTING DOOR FRAME, PANEL, AND ALL RELATED HARDWARE COMPLETELY.
2. REMOVE ALL CASEWORK, EMBEDDED PLUMBING FIXTURES, AND RELATED ITEMS ENTIRELY.
3. REMOVE EXISTING WINDOW / STOREFRONT SYSTEM AND ALL RELATED COMPONENTS, INCLUDING BLINDS/SHADES, COMPLETELY.
4. CUT AND REMOVE EXISTING WALL OR PORTION OF WALL AS INDICATED AND ALL RELATED COMPONENTS ENTIRELY. PATCH AND REPAIR ADJACENT WALLS AS NECESSARY. SALVAGE WALL-MOUNTED ITEMS FOR RE-USE. CONFIRM ALL SALVAGED ITEMS WITH OWNER.
5. REMOVE EXISTING COLUMN COVER ENTIRELY.
6. REMOVE EXISTING CONDUIT TRACK AND ALL RELATED COMPONENTS ENTIRELY.
7. REMOVE EXISTING ELECTRIC WATER COOLER AND ALL HARDWARE ENTIRELY.
8. REMOVE EXISTING TOILET, URINAL, TOILET ACCESSORIES, AND ALL RELATED HARDWARE COMPLETELY.
9. CUT AND REMOVE PORTION OF EXISTING WALL FOR NEW DOOR AND FRAME. COORDINATE WITH DOOR SCHEDULE AND PROVIDE ALL NECESSARY SUPPORT.
10. REMOVE TOILET PARTITION SYSTEM ENTIRELY. PATCH AND REPAIR ADJACENT WALLS AS NECESSARY FOR SMOOTH INSTALLATION OF NEW FINISHES.
11. REMOVE ALL WALLPAPER AND FLOORING IN STAIR TOWER. PREP EXISTING SURFACES TO RECEIVE NEW FINISHES PER FINISH SCHEDULE.
12. REMOVE GYPSUM BOARD ENTIRELY FROM THE INTERIOR SIDE OF THE EXTERIOR WALLS IN THIS ROOM. CLEAN REMAINING GYPSUM BOARDS AND PREP FOR NEW FINISHES PER FINISH SCHEDULE.
13. REMOVE EXISTING MOP SINK AND PREPARE FOR INSTALLATION OF NEW MOP SINK AS SHOWN IN FLOOR PLAN.
14. EXISTING ELECTRICAL PANELS SEE ELECTRICAL PLANS
15. REMOVE ALL EXISTING GYPSUM WALLBOARD ON EXTERIOR WALLS TO REMAIN. TYPICAL ALL EXTERIOR WALLS
15. REMOVE AND REPLACE ALL EXISTING GYPSUM WALLBOARD ON EXTERIOR WALLS TO REMAIN.
16. REMOVE EXISTING DOOR, FRAME, AND ALL RELATED HARDWARE. PREP OPENING FOR NEW DOOR AND FRAME PER DOOR SCHEDULE.
17. CUT AND REMOVE PORTION OF EXISTING CONCRETE SLAB FOR NEW ELEVATOR PIT. SEE SECTIONS FOR DETAILS AND EXACT DIMENSIONS. PATCH AND REPAIR ALL ADJACENT SURFACES.
18. REMOVE EXISTING SOFFIT AND OLD EXTERIOR WALL FRAMING LOACTED ABOVE THE LAY-IN CEILING IN THIS AREA.

OAKLEY COLLIER ARCHITECTS
OCA
109 Candlewood Road, Rocky Mount, NC 27804 [P] 252.937.2500
205 W. Martin Street, Raleigh, NC 27601

RENOVATION FOR:
CRAVEN COUNTY GOVERNMENT CENTER EAST
CRAVEN COUNTY
1208 E. MAIN STREET, HAVELOCK, NORTH CAROLINA 28532

OAKLEY COLLIER ARCHITECTS, P.A. REGISTERED ARCHITECTURAL CORPORATION CERT NO. 50681 NORTH CAROLINA ROCKY MOUNT, NC

TIMOTHY D. OAKLEY REGISTERED ARCHITECT NORTH CAROLINA ROCKY MOUNT, N.C. 05/30/26

GENERAL NOTE:
Prior to construction start. Contractor shall verify & be responsible for all Dimensions.

Revisions

#	Description	Date

Date MAY 30 2026	Project No. 25012
Drawn By ACR	Sheet No. D1.1
Checked By DG	

Sheet Title
DEMOLITION PLANS

Copyright © 2025 Oakley Collier Architects. These drawings are of the property of the Architect for use under his supervision. No reproduction or other use is allowed without permission.

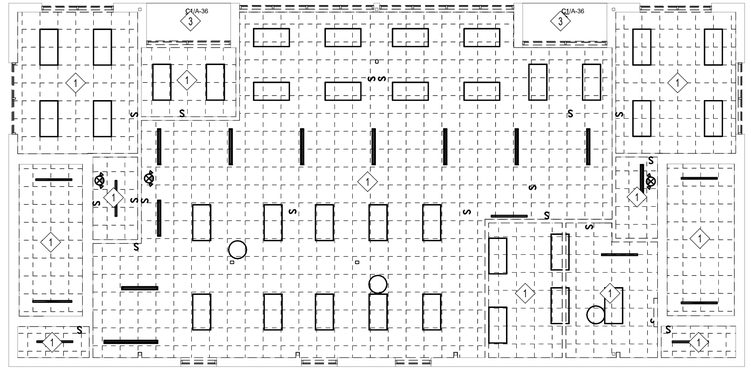

1 D1.2 SECOND FLOOR DEMOLITION RCP

1/8" = 1'-0"

2 D1.2 FIRST FLOOR DEMOLITION RCP

1/8" = 1'-0"

DEMOLITION LEGEND

2X2 EXISTING LAY-IN CEILING TO REMAIN	EXISTING BUILDING TO REMAIN
2X2 EXISTING LAY IN CEILING WITHIN PROJECT SCOPE. DEMOLISH AND REPLACE ALL CEILING TILES.	DASHED LINE INDICATES WALL OR DOOR AND ALL ASSOCIATED COMPONENTS TO BE DEMOLISHED.
2X4 LIGHT FIXTURE TO BE RELOCATED	SOLID LINE INDICATES WALL, DOOR, OR CEILING TO REMAIN
SUPPLY DIFFUSER TO BE RELOCATED	# DEMOLITION KEYNOTE TAG

DEMOLITION NOTES

A. FIELD VERIFY ALL EXISTING CONSTRUCTION CONDITIONS AND FINISHES PRIOR TO SUBMITTING A BID AND START OF ANY WORK. DISCREPANCIES IN ACTUAL CONDITIONS AND PLANS SHALL BE BROUGHT TO THE ATTENTION OF THE ARCHITECT AND/OR ENGINEER FOR EVALUATION BEFORE SUBMITTING BID AND/OR CONTINUING WITH WORK.
B. FIELD VERIFY THE LOCATION OF ALL UTILITIES, INCLUDING BURIAL DEPTH, PRIOR TO START OF ANY WORK. CONDITIONS THAT PROHIBIT THE WORK FROM BEING PERFORMED AS SHOWN SHALL BE BROUGHT TO THE ATTENTION OF THE ARCHITECT AND/OR ENGINEER FOR EVALUATION BEFORE CONTINUING WITH WORK.
C. VERIFY WITH THE OWNER PRIOR TO THE START OF WORK THE EXTENT OF DEMOLITION ITEMS TO BE SALVAGED.
D. ITEMS NOT BEING SALVAGED SHALL BE TRANSPORTED AND DISPOSED OF IN A LEGAL MANNER IN ACCORDANCE WITH ALL APPLICABLE CODES.
E. ADDITIONAL DEMOLITION WORK ASSOCIATED WITH PLUMBING, MECHANICAL, AND ELECTRICAL WORK IS REQUIRED. COORDINATE WORK REQUIRED WITH ALL TRADES.
F. ALL DEMOLITION PLUMBING, MECHANICAL, AND ELECTRICAL WORK SHALL BE PERFORMED IN COMPLIANCE WITH ALL APPLICABLE CODES.
G. ALL DEMOLITION WORK SHALL BE COORDINATED AND BE PERFORMED IN ACCORDANCE WITH OWNER.
H. REMOVE, REPLACE AND/OR REINSTALL ALL EXISTING WALL MOUNTED DEVICE COVER PLATES INCLUDING SWITCHES, RECEPTACLES, OUTLETS, PANEL FACES, RECESSED CABINET FACES, ETC., AS REQUIRED FOR RENOVATION WORK AND PROPER INSTALLATION OF NEW FINISHES. FINISHING/PAINTING AROUND EXISTING NOTED ITEMS WILL NOT BE ACCEPTED.
I. SEE SPECIFICATIONS FOR ADDITIONAL DEMOLITION REQUIREMENTS.
J. CLEAN AND PREPARE ALL EXISTING SURFACES/SUBSTRATES TO REMAIN AS REQUIRED FOR PROPER INSTALLATION OF NEW FINISHES PER MANUFACTURER'S RECOMMENDATIONS.
K. CLEAN AND PREPARE EXISTING SUBSTRATE IN ALL AREAS RECEIVING NEW FLOOR FINISHES AS REQUIRED BY RENOVATION WORK AND FOR PROPER INSTALLATION OF NEW FINISHES PER MANUFACTURER'S RECOMMENDATIONS.
L. PERFORM DEMOLITION WORK IN A MANNER SO AS TO MINIMIZE DAMAGE TO EXISTING SURROUNDING ITEMS TO REMAIN.
M. PATCH ALL EXISTING FLOORS, WALLS, AND CEILINGS AS REQUIRED FOR DEMOLITION AND RENOVATION WORK INCLUDING ALL PLUMBING, MECHANICAL, AND ELECTRICAL WORK.
N. PATCH ALL EXISTING TO REMAIN FLOORS, WALLS, AND CEILINGS THAT ARE DAMAGED DURING THE COURSE OF DEMOLITION WORK INCLUDING ALL PLUMBING, MECHANICAL, AND ELECTRICAL DEMOLITION WORK.
O. FURNISH AND INSTALL FLOOR LEVELING COMPOUND AS NECESSARY TO ACHIEVE A SMOOTH AND MONOLITHIC APPEARANCE FOR PROPER INSTALLATION OF NEW FINISHES. NOTIFY ARCHITECT IN ADVANCE IF THE LEVELING COMPOUND SHALL CREATE ANY UNEVEN FLOOR TRANSITIONS.
P. CUT AND PATCH EXISTING WALLS AS NECESSARY FOR RENOVATION AND DEMOLITION WORK. WALLS SHALL BE PATCHED TO MATCH ADJACENT EXISTING SURFACES AND PROVIDE A SMOOTH AND SEAMLESS TRANSITION FROM NEW TO EXISTING.
Q. IT IS THE INTENT OF THESE DOCUMENTS THAT "PATCH" MEANS THAT THE EXISTING CONSTRUCTION SHALL BE REPAIRED IN A MANNER, WITH SAME OR SIMILAR MATERIALS, PROVIDING A SMOOTH AND SEAMLESS TRANSITION FROM NEW TO EXISTING MATERIALS AND THE PATCH SHALL BE PREPARED TO RECEIVE NEW FINISHES PER FINISH MANUFACTURER'S RECOMMENDATIONS.
R. IT IS THE INTENT OF THESE DOCUMENTS THAT "PREPARED" MEANS THAT THE EXISTING CONSTRUCTION SHALL BE MADE READY TO RECEIVE NEW FINISHES IN ACCORDANCE WITH FINISH MANUFACTURER'S RECOMMENDATIONS.
S. REMOVE ALL WINDOW TREATMENTS FROM ALL WINDOWS WITHIN LIMITS OF WORK AREA. PATCH AND REPAIR EXISTING CONSTRUCTION TO REMAIN AS NECESSARY.
T. REMOVE ALL DECORATIVE DOOR TRIM ELEMENTS FROM ALL DOORS WITHIN THE LIMITS OF THE WORK AREA AND REPAIR EXISTING CONSTRUCTION TO REMAIN AS NECESSARY.
U. REMOVE ALL MISCELLANEOUS OFFICE TYPE WALL MOUNTED ITEMS WITHIN THE LIMITS OF THE WORK AREA AND REPAIR EXISTING CONSTRUCTION TO REMAIN AS NECESSARY.
V. REMOVE ALL EXISTING EXTERIOR LIGHTING FIXTURES, CAMERAS, AND ALL SOFFITS AND FASCIAS.
W. PATCH AND REPAIR ANY EXISTING THROUGH-WALL VENTS THAT ARE NO LONGER NEEDED FOR NEW CONSTRUCTION.
X. REMOVE ALL EXISTING VINYL WALLCOVERING ON ALL FIRST & SECOND FLOOR WALLS THAT ARE TO REMAIN. PREP ALL EXISTING WALLS TO RECEIVE NEW PAINT PER THE FINISH SCHEDULE.
Y. REMOVE ALL EXISTING GYPSUM WALLBOARD ON EXISTING TO REMAIN EXTERIOR WALLS.

DEMOLITION KEYNOTES - RCP

1. REMOVE ALL EXISTING CEILING TILE AND GRID IN THIS ROOM. SALVAGE CLEAN TILES AND ALL CEILING-MOUNTED ITEMS FOR RE-USE. CONFIRM ALL SALVAGED ITEMS WITH OWNER.
2. REMOVE ALL EXISTING GYPSUM CEILING IN THIS ROOM. SALVAGE ALL CEILING-MOUNTED ITEMS FOR RE-USE. CONFIRM ALL SALVAGED ITEMS WITH OWNER.
3. ALTERNATE G-1 - REMOVE EXISTING SOFFIT SHEATHING AS REQUIRED FOR NEW SOFFIT SHEATHING INSTALLATION.

OAKLEY COLLIER ARCHITECTS
OCA
109 Candlewood Road, Rocky Mount, NC 27804 [P] 252.937.2500
205 W. Martin Street, Raleigh, NC 27601

RENOVATION FOR:

CRAVEN COUNTY GOVERNMENT CENTER EAST

CRAVEN COUNTY
1208 E. MAIN STREET, HAVELOCK, NORTH CAROLINA 28532

OAKLEY COLLIER ARCHITECTS, P.A. REGISTERED ARCHITECTURAL COMPANY CERT NO. 50681 NORTH CAROLINA ROCKY MOUNT, NC

TIMOTHY D. OAKLEY REGISTERED ARCHITECT NORTH CAROLINA ROCKY MOUNT, NC 08/30/26

GENERAL NOTE:
Prior to construction start. Contractor shall verify & be responsible for all Dimensions.

Revisions #	Description	Date

Date: MAY 30 2026	Project No.: 25012
Drawn By: ACR	Sheet No.: D1.2
Checked By: DG	

Sheet Title: DEMOLITION - REFLECTED CEILING PLAN

Copyright © 2025 Oakley Collier Architects. These drawings are of the property of the Architect for use under his supervision. No reproduction or other use is allowed without permission.

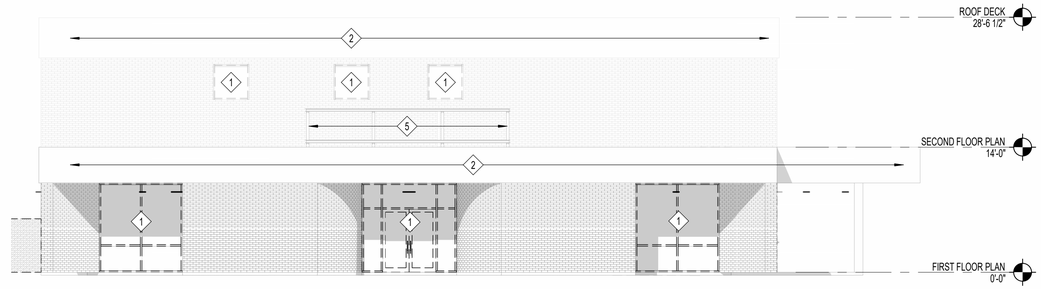

1 D2.1 WEST DEMO ELEVATION

1/8" = 1'-0"

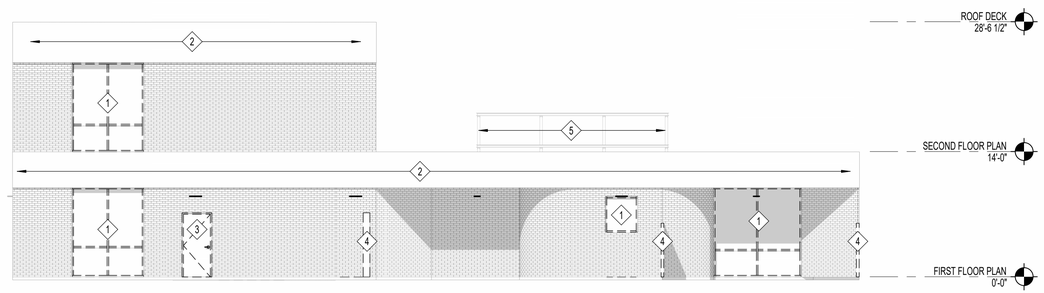

2 D2.1 NORTH DEMO ELEVATION

1/8" = 1'-0"

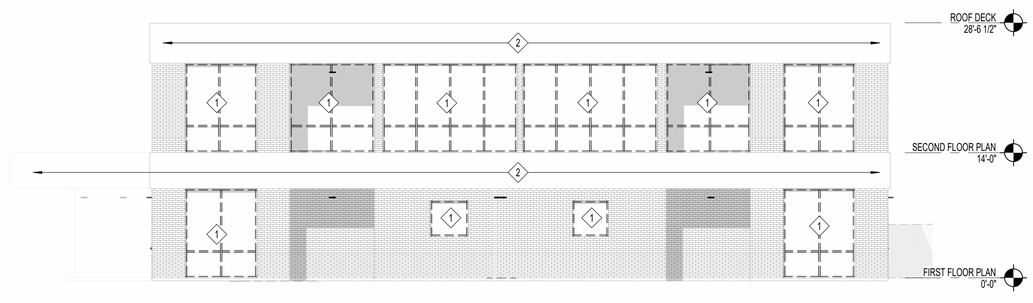

3 D2.1 EAST DEMO ELEVATION

1/8" = 1'-0"

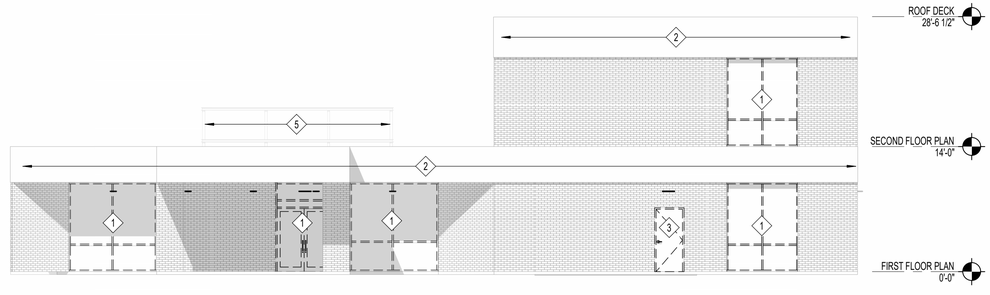

4 D2.1 SOUTH DEMO ELEVATION

1/8" = 1'-0"

DEMOLITION LEGEND

2X2 EXISTING LAY-IN CEILING TO REMAIN	EXISTING BUILDING TO REMAIN
2X2 EXISTING LAY IN CEILING WITHIN PROJECT SCOPE. DEMOLISH AND REPLACE ALL CEILING TILES.	DASHED LINE INDICATES WALL OR DOOR AND ALL ASSOCIATED COMPONENTS TO BE DEMOLISHED.
2X4 LIGHT FIXTURE TO BE RELOCATED	SOLID LINE INDICATES WALL, DOOR, OR CEILING TO REMAIN
SUPPLY DIFFUSER TO BE RELOCATED	DEMOLITION KEYNOTE TAG

DEMOLITION NOTES

A. FIELD VERIFY ALL EXISTING CONSTRUCTION CONDITIONS AND FINISHES PRIOR TO SUBMITTING A BID AND START OF ANY WORK. DISCREPANCIES IN ACTUAL CONDITIONS AND PLANS SHALL BE BROUGHT TO THE ATTENTION OF THE ARCHITECT AND/OR ENGINEER FOR EVALUATION BEFORE SUBMITTING BID AND/OR CONTINUING WITH WORK.
B. FIELD VERIFY THE LOCATION OF ALL UTILITIES, INCLUDING BURIAL DEPTH, PRIOR TO START OF ANY WORK. CONDITIONS THAT PROHIBIT THE WORK FROM BEING PERFORMED AS SHOWN SHALL BE BROUGHT TO THE ATTENTION OF THE ARCHITECT AND/OR ENGINEER FOR EVALUATION BEFORE CONTINUING WITH WORK.
C. VERIFY WITH THE OWNER PRIOR TO THE START OF WORK THE EXTENT OF DEMOLITION ITEMS TO BE SALVAGED.
D. ITEMS NOT BEING SALVAGED SHALL BE TRANSPORTED AND DISPOSED OF IN A LEGAL MANNER IN ACCORDANCE WITH ALL APPLICABLE CODES.
E. ADDITIONAL DEMOLITION WORK ASSOCIATED WITH PLUMBING, MECHANICAL, AND ELECTRICAL WORK IS REQUIRED. COORDINATE WORK REQUIRED WITH ALL TRADES.
F. ALL DEMOLITION PLUMBING, MECHANICAL, AND ELECTRICAL WORK SHALL BE PERFORMED IN COMPLIANCE WITH ALL APPLICABLE CODES.
G. ALL DEMOLITION WORK SHALL BE COORDINATED AND BE PERFORMED IN ACCORDANCE WITH OWNER.
H. REMOVE, REPLACE AND/OR REINSTALL ALL EXISTING WALL MOUNTED DEVICE COVER PLATES INCLUDING SWITCHES, RECEPTACLES, OUTLETS, PANEL FACES, RECESSED CABINET FACES, ETC., AS REQUIRED FOR RENOVATION WORK AND PROPER INSTALLATION OF NEW FINISHES. FINISHING/PAINTING AROUND EXISTING NOTED ITEMS WILL NOT BE ACCEPTED.
I. SEE SPECIFICATIONS FOR ADDITIONAL DEMOLITION REQUIREMENTS.
J. CLEAN AND PREPARE ALL EXISTING SURFACES/SUBSTRATES TO REMAIN AS REQUIRED FOR PROPER INSTALLATION OF NEW FINISHES PER MANUFACTURER'S RECOMMENDATIONS.
K. CLEAN AND PREPARE EXISTING SUBSTRATE IN ALL AREAS RECEIVING NEW FLOOR FINISHES AS REQUIRED BY RENOVATION WORK AND FOR PROPER INSTALLATION OF NEW FINISHES PER MANUFACTURER'S RECOMMENDATIONS.
L. PERFORM DEMOLITION WORK IN A MANNER SO AS TO MINIMIZE DAMAGE TO EXISTING SURROUNDING ITEMS TO REMAIN.
M. PATCH ALL EXISTING FLOORS, WALLS, AND CEILINGS AS REQUIRED FOR DEMOLITION AND RENOVATION WORK INCLUDING ALL PLUMBING, MECHANICAL, AND ELECTRICAL WORK.
N. PATCH ALL EXISTING TO REMAIN FLOORS, WALLS, AND CEILINGS THAT ARE DAMAGED DURING THE COURSE OF DEMOLITION WORK INCLUDING ALL PLUMBING, MECHANICAL, AND ELECTRICAL DEMOLITION WORK.
O. FURNISH AND INSTALL FLOOR LEVELING COMPOUND AS NECESSARY TO ACHIEVE A SMOOTH AND MONOLITHIC APPEARANCE FOR PROPER INSTALLATION OF NEW FINISHES. NOTIFY ARCHITECT IN ADVANCE IF THE LEVELING COMPOUND SHALL CREATE ANY UNEVEN FLOOR TRANSITIONS.
P. CUT AND PATCH EXISTING WALLS AS NECESSARY FOR RENOVATION AND DEMOLITION WORK. WALLS SHALL BE PATCHED TO MATCH ADJACENT EXISTING SURFACES AND PROVIDE A SMOOTH AND SEAMLESS TRANSITION FROM NEW TO EXISTING.
Q. IT IS THE INTENT OF THESE DOCUMENTS THAT "PATCH" MEANS THAT THE EXISTING CONSTRUCTION SHALL BE REPAIRED IN A MANNER, WITH SAME OR SIMILAR MATERIALS, PROVIDING A SMOOTH AND SEAMLESS TRANSITION FROM NEW TO EXISTING MATERIALS AND THE PATCH SHALL BE PREPARED TO RECEIVE NEW FINISHES PER FINISH MANUFACTURER'S RECOMMENDATIONS.
R. IT IS THE INTENT OF THESE DOCUMENTS THAT "PREPARED" MEANS THAT THE EXISTING CONSTRUCTION SHALL BE MADE READY TO RECEIVE NEW FINISHES IN ACCORDANCE WITH FINISH MANUFACTURER'S RECOMMENDATIONS.
S. REMOVE ALL WINDOW TREATMENTS FROM ALL WINDOWS WITHIN LIMITS OF WORK AREA. PATCH AND REPAIR EXISTING CONSTRUCTION TO REMAIN AS NECESSARY.
T. REMOVE ALL DECORATIVE DOOR TRIM ELEMENTS FROM ALL DOORS WITHIN THE LIMITS OF THE WORK AREA AND REPAIR EXISTING CONSTRUCTION TO REMAIN AS NECESSARY.
U. REMOVE ALL MISCELLANEOUS OFFICE TYPE WALL MOUNTED ITEMS WITHIN THE LIMITS OF THE WORK AREA AND REPAIR EXISTING CONSTRUCTION TO REMAIN AS NECESSARY.
V. REMOVE ALL EXISTING EXTERIOR LIGHTING FIXTURES, CAMERAS, AND ALL SOFFITS AND FASCIAS.
W. PATCH AND REPAIR ANY EXISTING THROUGH-WALL VENTS THAT ARE NO LONGER NEEDED FOR NEW CONSTRUCTION.
X. REMOVE ALL EXISTING VINYL WALLCOVERING ON ALL FIRST & SECOND FLOOR WALLS THAT ARE TO REMAIN. PREP ALL EXISTING WALLS TO RECEIVE NEW PAINT PER THE FINISH SCHEDULE.
Y. REMOVE ALL EXISTING GYPSUM WALLBOARD ON EXISTING TO REMAIN EXTERIOR WALLS.

DEMOLITION KEYNOTES - ELEVATIONS

1. REMOVE EXISTING WINDOW / STOREFRONT SYSTEM AND ALL RELATED COMPONENTS, INCLUDING BLINDS/SHADES, COMPLETELY.
2. ALTERNATE G-1 - REMOVING EXISTING EIFS SYSTEM AND SHEATHING
3. REMOVE EXISTING DOOR FRAME, PANEL, AND ALL RELATED HARDWARE COMPLETELY.
4. CUT AND REMOVE EXISTING WALL OR PORTION OF WALL AS INDICATED AND ALL RELATED COMPONENTS ENTIRELY. PATCH AND REPAIR ADJACENT WALLS AS NECESSARY. SALVAGE WALL-MOUNTED ITEMS FOR RE-USE. CONFIRM ALL SALVAGED ITEMS WITH OWNER.
5. REMOVE EXISTING SCREEN WALL PANELS. EXISTING STEEL PIPE COLUMNS AND STEEL SUPPORT FRAME ARE TO REMAIN.

OAKLEY COLLIER ARCHITECTS
OCA
109 Candlewood Road, Rocky Mount, NC 27804 [P] 252.937.2500
205 W. Martin Street, Raleigh, NC 27601

RENOVATION FOR:
CRAVEN COUNTY GOVERNMENT CENTER EAST
CRAVEN COUNTY
1208 E. MAIN STREET, HAVELOCK, NORTH CAROLINA 28532

OAKLEY COLLIER ARCHITECTS, P.A. REGISTERED ARCHITECTURAL COMPANY CERT NO. 50681 NORTH CAROLINA ROCKY MOUNT, NC

TIMOTHY D. OAKLEY REGISTERED ARCHITECT NORTH CAROLINA ROCKY MOUNT, N.C. 05/30/26

GENERAL NOTE:
Prior to construction start. Contractor shall verify & be responsible for all Dimensions.

Revisions #	Description	Date

Date: MAY 30 2026	Project No.: 25012
Drawn By: ACR	Sheet No.: D2.1
Checked By: DG	

Sheet Title: DEMOLITION - ELEVATIONS

Copyright © 2025 Oakley Collier Architects. These drawings are of the property of the Architect for use under his supervision. No reproduction or other use is allowed without permission.

WALL LEGEND

INTERIOR STUD WALL - 3 5/8"			INTERIOR STUD WALL - 3 5/8" (SOUND RESISTANT)			INTERIOR STUD WALL - 3 5/8" - **1HR RATED U419**			INTERIOR STUD WALL - 3 5/8" (SOUND RESISTANT) - **1HR RATED**			INTERIOR STUD WALL - 6" (SOUND-RESISTANT)			INTERIOR STUD WALL - 6" (SOUND-RESISTANT) - **1HR RATED**			INTERIOR CHASE WALL - 1 1/2"		
MARK	PLAN VIEW	REMARKS	MARK	PLAN VIEW	REMARKS	MARK	PLAN VIEW	REMARKS	MARK	PLAN VIEW	REMARKS	MARK	PLAN VIEW	REMARKS	MARK	PLAN VIEW	REMARKS	MARK	PLAN VIEW	REMARKS
1A		TOP OF WALL = TIGHT TO DECK	1B		TOP OF WALL = TIGHT TO DECK	1C		TOP OF WALL = TIGHT TO DECK	1D		TOP OF WALL = TIGHT TO DECK	2B		TOP OF WALL = TIGHT TO DECK	2D		TOP OF WALL = TIGHT TO DECK	3		TOP OF WALL = TIGHT TO DECK

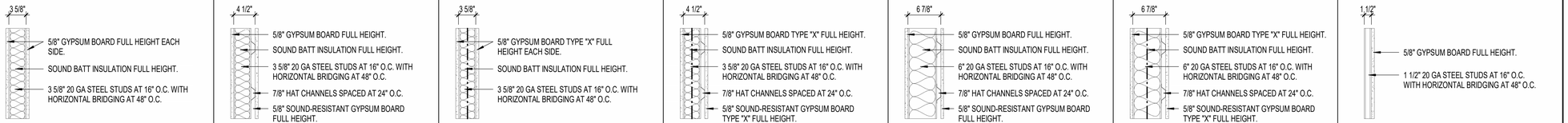

INTERIOR / EXTERIOR - ELEVATOR SHAFT WALL - **1HR RATED**

MARK	PLAN VIEW	REMARKS
4		TOP OF WALL = TIGHT TO DECK

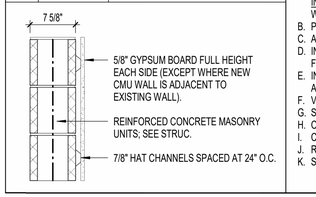

GENERAL FLOOR PLAN NOTES

A. DIMENSIONS ON THIS PLAN ARE FROM: FACE OF EXTERIOR WALL TO CENTERLINE OF INTERIOR WALLS. VERIFY ALL DIMENSIONS IN-FIELD AND ALIGN ALL NEW WALLS TO BE FLUSH WITH EXISTING WALLS WHERE ADJACENT.
B. PROVIDE BRACING BACK TO STRUCTURE FOR INTERIOR WALLS, TYPICAL.
C. ALL DRYWALL SHALL BE 5/8" AND SHALL EXTEND 4" MINIMUM ABOVE FINISH CEILING (U.N.O.)
D. INSTALL SOUND ATTENUATION BATT INSULATION FULL HEIGHT IN ALL INTERIOR STUD FRAMED WALLS.
E. INSTALL SOUND ATTENUATION BATT INSULATION 4' WIDE AROUND CEILING PERIMETER OF ALL ROOMS WITH SOUND BATT IN WALLS.
F. VERIFY ALL DIMENSIONS AND SIZES PRIOR TO CONSTRUCTION.
G. SCHEDULE AND COORDINATE ALL INSPECTIONS REQUIRED.
H. OBTAIN ALL PERMITS REQUIRED.
I. COORDINATE ALL SCHEDULES WITH THE OWNER PRIOR TO CONSTRUCTION.
J. REFER TO STRUCTURAL PLANS FOR ALL STRUCTURAL HEADERS.
K. SEE DOOR AND WINDOW SCHEDULES FOR ALL DOOR AND WINDOW SIZES.

KEYNOTES - FLOOR PLAN

1. EXISTING COLUMN. VERIFY EXACT LOCATION IN FIELD.
2. INFILL WALL AS REQ'D AROUND NEW DOOR. USE BRICK FACADE TO MATCH ADJACENT EXISTING BRICK. SEE ELEVATIONS
3. NEW COUNTY SEAL, SEE BUILDING ELEVATIONS.
4. NEW MOP SINK; SEE PME.
5. UTILITY SHELF TO BE INSTALLED IN THIS ROOM. FOR DETAILS ON THE UTILITY SHELF, SEE SHEET TOILET ACCESSORY CHART.

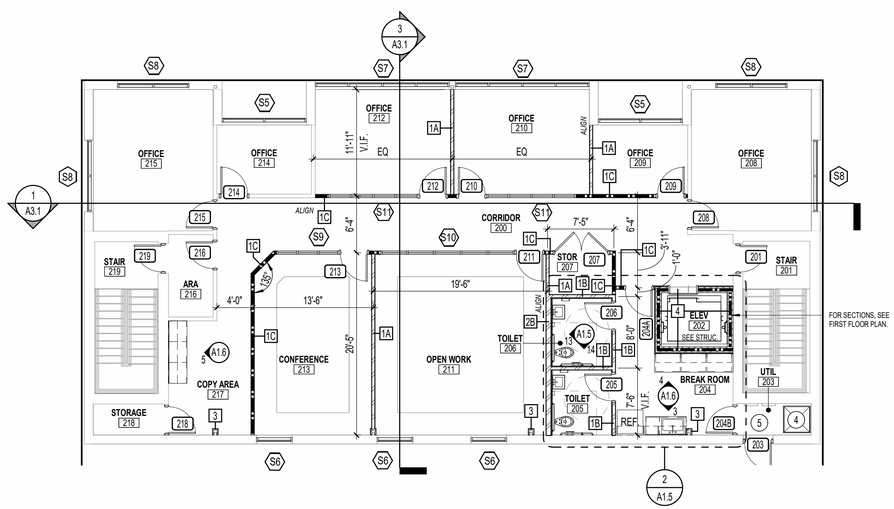

2 A1.1 SECOND FLOOR PLAN

1/8" = 1'-0"

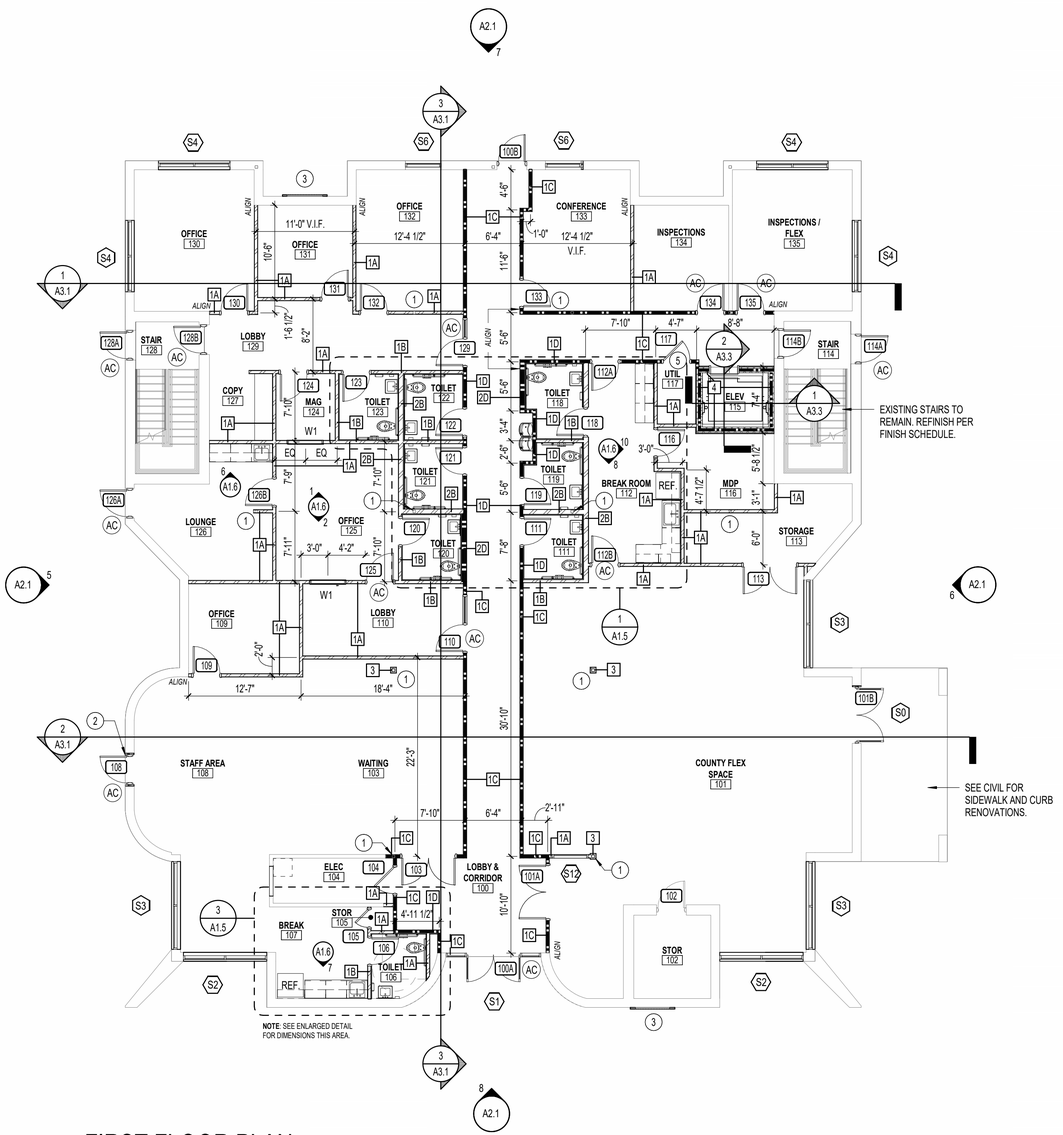

1 A1.1 FIRST FLOOR PLAN

1/8" = 1'-0"

Copyright © 2025 Oakley Collier Architects. These drawings are of the property of the Architect for use under his supervision. No reproduction or other use is allowed without permission.

OAKLEY COLLIER ARCHITECTS
OCA
109 Candlewood Road, Rocky Mount, NC 27804 [P] 252.937.2500
205 W. Martin Street, Raleigh, NC 27601

RENOVATION FOR:
CRAVEN COUNTY GOVERNMENT CENTER EAST
CRAVEN COUNTY
1208 E. MAIN STREET, HAVELOCK, NORTH CAROLINA 28532

OAKLEY COLLIER ARCHITECTS P.A. REGISTERED ARCHITECTURAL COMPANY CERT NO. 50681 NORTH CAROLINA ROCKY MOUNT, NC

TIMOTHY D. OAKLEY REGISTERED ARCHITECT NORTH CAROLINA ROCKY MOUNT, NC 05/30/26

GENERAL NOTE:
Prior to construction start. Contractor shall verify & be responsible for all Dimensions.

Revisions #	Description	Date

Date: MAY 30 2026	Project No: 25012
Drawn By: ACR	Sheet No. A1.1
Checked By: DG	
Sheet Title: FLOOR PLANS	

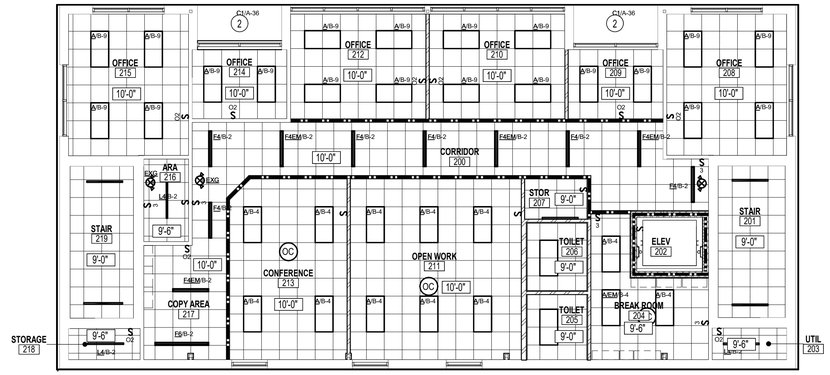

2 / A1.2 SECOND FLOOR RCP

1/8" = 1'-0"

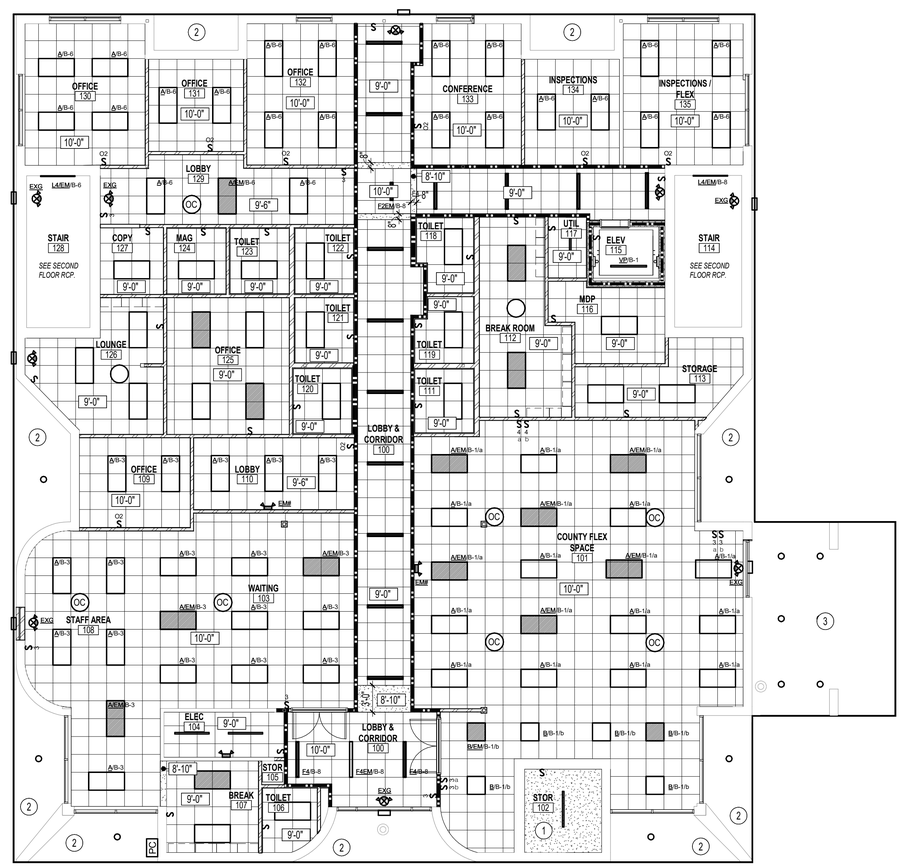

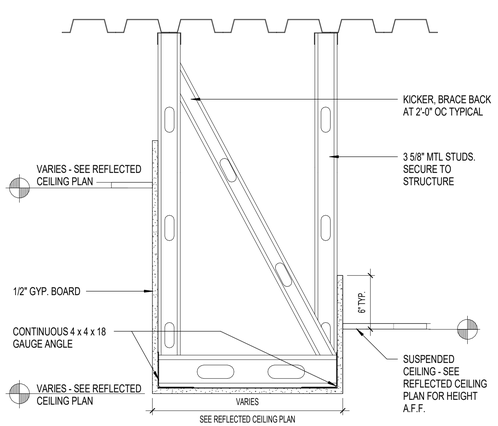

3 / A1.2 TYP BULKHEAD DETAIL

1 1/2" = 1'-0"

1 / A1.2 FIRST FLOOR RCP

1/8" = 1'-0"

LEGEND

ACT-1: 2X2 LAY-IN CEILING SYSTEM	HIGH BAY LED LIGHTING FIXTURE
ACT-2: 2X2 LAY-IN CEILING SYSTEM (VINYL COATED) TYP IN WET LOCATIONS	8' BAR LIGHT FIXTURE
5/8" GYPSUM BOARD	CAN LIGHT FIXTURE
10'-10" CEILING HEIGHT KEY	PO1 LED VERTICAL PENDANT FIXTURE
	TV WALL MOUNTED TELEVISION

CEILING NOTES

A. SEE MECHANICAL, ELECTRICAL, PLUMBING, AND FIRE PROTECTION PLANS FOR FULL DESCRIPTION OF CEILING MOUNTED ITEMS/DEVICES
B. ALL GRIDS ARE CENTERED IN A ROOM UNLESS NOTED OTHERWISE.
C. REFER TO REFLECTED CEILING PLANS FOR CEILING HEIGHTS AND FINISH PLANS FOR CEILING TYPES.
D. CONTRACTOR TO REVIEW LAYOUT AND NOTIFY ARCHITECT OF ACOUSTICAL CEILING PANELS THAT ARE LESS THAN 3" IN WIDTH OR LENGTH.
E. ALL NEW LIGHT FIXTURES, EXIT SIGNS, SPRINKLER HEADS AND TERMINAL DEVICES TO BE CENTERED IN CEILING PANELS, UNLESS OTHERWISE INDICATED.
F. NOT ALL MEP DEVICES ARE SHOWN IN CEILING PLANS, SEE MEP DRAWINGS FOR LOCATIONS AND QUANTITIES.
G. FOR PENDANT MOUNTING HEIGHT REFER TO ELEVATIONS AND REFLECTED CEILING PLAN LEGEND

KEYNOTES - RCP

3. BASE BID - PATCH AND REPAIR EXISTING EIFS SOFFIT AS REQUIRED. RE-PAINT. ALTERNATE G-1 - REMOVE EXISTING SOFFIT AND REPLACE WITH 5/8" GLASSMAT SHEATHING AND DEFS FINISH.
2. BASE BID - PATCH AND REPARE EXISTING SOFFITS AS REQUIRED AND REPAINT. ALTERNATE G-1 - REMOVE EXISTING SOFFIT AND REPLACE WITH NEW GLASSMAT SHEATHING AND DEFS FINISH
1. REPLACE OLD GYPSUM CEILING BOARD WITH NEW BOARD. ALIGN TO EXISTING CEILING HEIGHT. (PAINTED)

OAKLEY COLLIER ARCHITECTS
OCA
109 Candlewood Road, Rocky Mount, NC 27804 [P] 252.937.2500
205 W. Martin Street, Raleigh, NC 27601

RENOVATION FOR:
CRAVEN COUNTY GOVERNMENT CENTER EAST
CRAVEN COUNTY
1208 E. MAIN STREET, HAVELOCK, NORTH CAROLINA 28532

OAKLEY COLLIER ARCHITECTS P.A. REGISTERED ARCHITECTURAL CORPORATION CERT. NO. 50681 NORTH CAROLINA ROCKY MOUNT, NC

TIMOTHY D. OAKLEY REGISTERED ARCHITECT NORTH CAROLINA ROCKY MOUNT, NC 05/30/26

GENERAL NOTE:
Prior to construction start. Contractor shall verify & be responsible for all Dimensions.

Revisions

#	Description	Date

Date: MAY 30 2026	Project No.: 25012
Drawn By: ACR	Sheet No.: A1.2
Checked By: DG	

Sheet Title: REFLECTED CEILING PLANS

Copyright © 2025 Oakley Collier Architects. These drawings are of the property of the Architect for use under his supervision. No reproduction or other use is allowed without permission.

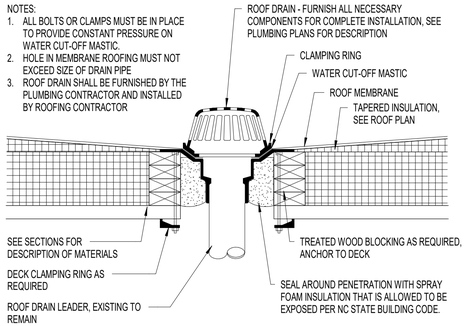

2 A1.3 ROOF DRAIN
1 1/2" = 1'-0"

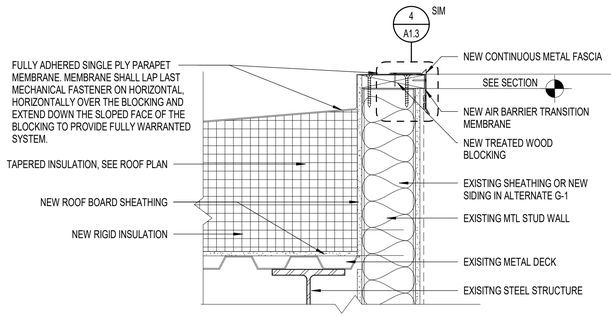

3 A1.3 ROOF EDGE DETAIL
1 1/2" = 1'-0"

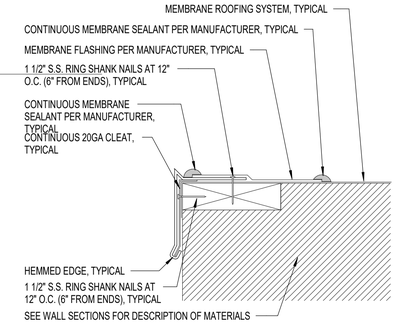

4 A1.3 FASCIA PROFILE
3" = 1'-0"

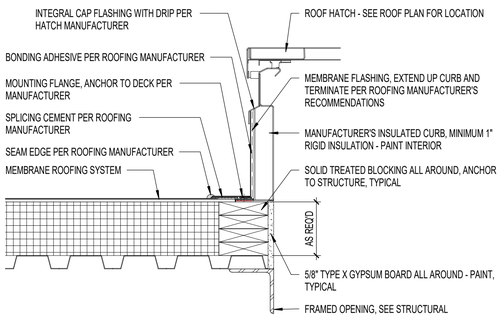

5 A1.3 ROOF HATCH CURB
1 1/2" = 1'-0"

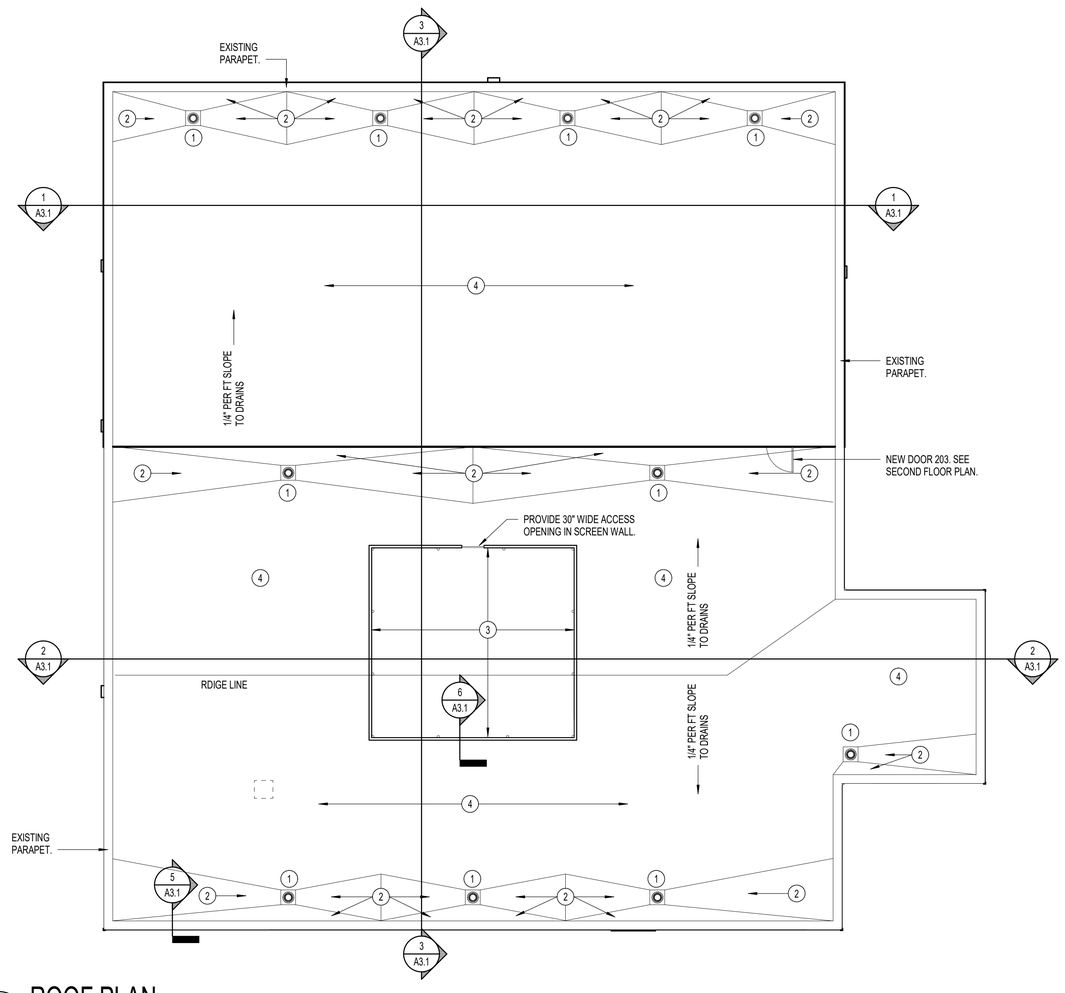

1 A1.3 ROOF PLAN
1/8" = 1'-0"

ROOF LEGEND

→	INDICATES DIRECTION OF ROOF SLOPE ACHIEVED THRU STRUCTURE AND TAPERED INSULATION.
*	INDICATES THICKNESS OF TAPERED INSULATION ABOVE PRIMARY ROOF INSULATION AND UNDERLAYMENT BOARD IF REQUIRED - REFER TO WALL SECTIONS AND STRUCTURAL FOR ACTUAL ELEVATIONS.
RD	PRIMARY ROOF DRAIN, REFER TO PLUMBING PLANS FOR DESCRIPTION, TYPICAL.
OD	SECONDARY (EMERGENCY) ROOF DRAIN, REFER TO PLUMBING PLANS FOR DESCRIPTION, TYPICAL
SC	THROUGH WALL SCUPPER SECONDARY (EMERGENCY) ROOF DRAIN, TYPICAL.

GENERAL ROOF NOTES

A. CONTRACTOR SHALL COORDINATE ALL ROOF MOUNTED EQUIPMENT AND PENETRATIONS REQUIRED AND MAKE ALL NECESSARY PROVISIONS FOR SAME.
B. SEE CIVIL PLANS FOR RENOVATIONS TO EXISTING ROOF LEADERS
C. ALL ROOF MOUNTED ITEMS SHALL BE PAINTED; CLEAN PREPARE AND PRIME SURFACES AS REQUIRED - COLOR PER ARCHITECT.
D. FURNISH AND INSTALL 36" WIDE X LENGTH REQUIRED SELF ADHERED ICE AND WATER SHIELD ROOFING UNDERLAYMENT AT ALL EDGES, RIDGES, HIPS, AND VALLEYS.
E. PREPARE EXISTING SURFACES AS REQUIRED TO RECEIVE NEW ROOFING SYSTEM PER MANUFACTURER'S SPECIFICATIONS

KEYNOTES - ROOF PLAN

3. EXISTING MECHANICAL SCREEN WALL. REMOVE EXISTING WALL PANEL, CLEAN, PREP AND REPAINT ALL EXISTING STEEL PIPE COLUMNS AND HORIZONTAL FRAMING. ADD NEW FRAMING AND SIDING PER SCREEN DETAIL
2. NEW ROOF CRICKET - SLOPE TO DRAIN PER MANUFACTURERS SPECIFICATIONS.
1. NEW ROOF DRAIN TO TIE INTO EXISITNG PIPING. INSTALL PER MANUFACURERS SPECIFICATIONS
4. TAPERED RIGID INSULATION. R-25 MINIMUM. SLOPE TO EXISTING ROOF DRAIN LOCATIONS. INSTALL PER MANUFACTURER SPECIFICATIONS

OAKLEY COLLIER ARCHITECTS
OCA
109 Candlewood Road, Rocky Mount, NC 27804 [P] 252.937.2500
205 W. Martin Street, Raleigh, NC 27601

RENOVATION FOR:
CRAVEN COUNTY GOVERNMENT CENTER EAST
CRAVEN COUNTY
1208 E. MAIN STREET, HAVELOCK, NORTH CAROLINA 28532

OAKLEY COLLIER ARCHITECTS P.A. REGISTERED ARCHITECTURAL CORPORATION CERT. NO. 50681 NORTH CAROLINA ROCKY MOUNT, NC

TIMOTHY D. OAKLEY REGISTERED ARCHITECT NORTH CAROLINA ROCKY MOUNT, N.C.
05/30/26

GENERAL NOTE:
Prior to construction start. Contractor shall verify & be responsible for all Dimensions.

Revisions

#	Description	Date

Date: MAY 30 2026	Project No.: 25012
Drawn By: ACR	Sheet No.: A1.3
Checked By: DG	
Sheet Title: ROOF PLAN	

Copyright © 2025 Oakley Collier Architects. These drawings are of the property of the Architect for use under his supervision. No reproduction or other use is allowed without permission.

FINISH SCHEDULE

ROOM NUMBER	ROOM NAME	FLOOR	BASE	NORTH	EAST	SOUTH	WEST	CEILING	SIGNAGE	COMMENTS
100	LOBBY & CORRIDOR	LVT-1 / FT-1	RB	PNT-1	PNT-1	PNT-1	SEE PLAN	ACT-1 / GYP	AS REQ	SEE PLAN.
101	COUNTY FLEX SPACE	LVT-1 / LVT-2	RB	PNT-1	SEE PLAN	PNT-1	PNT-1	ACT-1	A	
102	STOR	LVT-1	RB	PNT-1	PNT-1	PNT-1	PNT-1	GYP	A	
103	WAITING	LVT-1 / LVT-2	RB	PNT-1	PNT-1	PNT-1	SEE PLAN	ACT-1 / GYP	A	
104	ELEC	LVT-1	RB	PNT-1	PNT-1	PNT-1	PNT-1	ACT-1	B	
105	STOR	LVT-1	RB	PNT-1	PNT-1	PNT-1	PNT-1	ACT-1	B	
106	TOILET	FT-2	TB	PNT-1E	WT-1	PNT-1E	PNT-1E	ACT-1	D	
107	BREAK	LVT-1	RB	PNT-1	PNT-1	PNT-1	PNT-1	ACT-1	B	
108	STAFF AREA	LVT-1	RB	PNT-2	PNT-1	PNT-1	PNT-2	ACT-2	A	
109	OFFICE	CPT-1	RB	PNT-1	PNT-1	PNT-1	PNT-1	ACT-1	A	
110	LOBBY	LVT-1	RB	PNT-1	PNT-1	PNT-1	PNT-2	ACT-1	A	
111	TOILET	FT-2	TB	PNT-1E	WT-1	PNT-1E	PNT-1E	ACT-1	D	
112	BREAK ROOM	LVT-1	RB	PNT-1	PNT-1	PNT-1	PNT-1	ACT-1	A	
113	STORAGE	LVT-1	RB	PNT-1	PNT-1	PNT-1	PNT-1	ACT-1	A	
114	STAIR	RF-1	RB	PNT-1	PNT-1	PNT-1	PNT-1	ACT-1	B / E	NEW RUBBER TREADS, RUBBER FLOORING, AND RUBBER BASE.
115	ELEV	LVT-1	RB	BY MANUF.	BY MANUF.	BY MANUF.	BY MANUF.	BY MANUF.	B	
116	MDP	LVT-1	RB	PNT-1	PNT-1	PNT-1	PNT-1	ACT-1	B	
117	UTIL	LVT-1	RB	PNT-1	PNT-1	PNT-1	PNT-1	ACT-1	B	
118	TOILET	FT-2	TB	PNT-1E	WT-1	PNT-1E	WT-1	ACT-1	D	
119	TOILET	FT-2	TB	PNT-1E	WT-1	PNT-1E	PNT-1E	ACT-1	D	
120	TOILET	FT-2	TB	PNT-1E	WT-1	PNT-1E	PNT-1E	ACT-1	D	
121	TOILET	FT-2	TB	PNT-1E	PNT-1E	PNT-1E	WT-1	ACT-1	D	
122	TOILET	FT-2	TB	PNT-1E	PNT-1E	PNT-1E	WT-1	ACT-1	D	
123	TOILET	FT-2	TB	PNT-1E	WT-1	PNT-1E	PNT-1E	ACT-1	D	
124	MAG	LVT-1	RB	PNT-1	PNT-1	PNT-1	PNT-1	ACT-1	A	
125	OFFICE	CPT-1	RB	PNT-1	PNT-1	PNT-1	PNT-1	ACT-1	A	INSTALL PER ELEVATOR MANUF'S RECOMMENDATION.
126	LOUNGE	LVT-1	RB	PNT-1	PNT-1	PNT-1	PNT-1	ACT-1	A	
127	COPY	LVT-1	RB	PNT-1	PNT-1	PNT-1	PNT-1	ACT-1	A	

FINISH SCHEDULE

ROOM NUMBER	ROOM NAME	FLOOR	BASE	NORTH	EAST	SOUTH	WEST	CEILING	SIGNAGE	COMMENTS
128	STAIR	RF-1	RB	PNT-1	PNT-1	PNT-1	PNT-1	ACT-1	B / E	NEW RUBBER TREADS, RUBBER FLOORING, AND RUBBER BASE.
129	LOBBY	LVT-1	RB	PNT-1	PNT-1	PNT-1	PNT-1	ACT-1	A	
130	OFFICE	CPT-1	RB	PNT-1	PNT-1	PNT-1	PNT-1	ACT-1	A	
131	OFFICE	CPT-1	RB	PNT-1	PNT-1	PNT-1	PNT-1	ACT-1	A	
132	OFFICE	CPT-1	RB	PNT-1	PNT-1	PNT-1	PNT-1	ACT-1	A	
133	CONFERENCE	CPT-1	RB	PNT-1	PNT-1	PNT-1	PNT-1	ACT-1	A	
134	INSPECTIONS	CPT-1	RB	PNT-1	PNT-1	PNT-1	PNT-1	ACT-1	A	
135	INSPECTIONS / FLEX	CPT-1	RB	PNT-1	PNT-1	PNT-1	PNT-1	ACT-1	A	
200	CORRIDOR	LVT-1	RB	PNT-1	PNT-1	SEE PLAN	PNT-1	ACT-1	A	
201	STAIR	RF-1	RB	PNT-1	PNT-1	PNT-1	PNT-1	ACT-1	E	NEW RUBBER TREADS, RUBBER FLOORING, AND RUBBER BASE.
202	ELEV	LVT-1	RB	BY MANUF.	BY MANUF.	BY MANUF.	BY MANUF.	BY MANUF.	B	
203	UTIL	LVT-1	RB	PNT-1	PNT-1	PNT-1	PNT-1	ACT-1	B	
204	BREAK ROOM	LVT-1	RB	PNT-1	PNT-1	PNT-1	PNT-1	ACT-1	A	
205	TOILET	FT-2	TB	PNT-1E	PNT-1E	PNT-1E	WT-1	ACT-1	D	
206	TOILET	FT-2	TB	PNT-1E	PNT-1E	PNT-1E	WT-1	ACT-1	D	
207	STOR	LVT-1	RB	PNT-1	PNT-1	PNT-1	PNT-1	ACT-1	A	
208	OFFICE	CPT-1	RB	PNT-1	PNT-1	PNT-1	PNT-1	ACT-1	A	
209	OFFICE	CPT-1	RB	PNT-1	PNT-1	PNT-1	PNT-1	ACT-1	A	
210	OFFICE	CPT-1	RB	PNT-1	PNT-1	PNT-1	PNT-1	ACT-1	A	
211	OPEN WORK	LVT-1 / LVT-2	RB	PNT-1	PNT-1	PNT-1	PNT-1	ACT-1	A	
212	OFFICE	CPT-1	RB	PNT-1	PNT-1	PNT-1	PNT-1	ACT-1	A	
213	CONFERENCE	LVT-1 / LVT-2	RB	PNT-1	PNT-1	PNT-1	PNT-1	ACT-1	A	
214	OFFICE	CPT-1	RB	PNT-1	PNT-1	PNT-1	PNT-1	ACT-1	A	
215	OFFICE	CPT-1	RB	PNT-1	PNT-1	PNT-1	PNT-1	ACT-1	A	
216	ARA	LVT-1	RB	PNT-1	PNT-1	PNT-1	PNT-1	ACT-1	A	
217	COPY AREA	LVT-1	RB	PNT-1	PNT-2	PNT-1	PNT-1	ACT-1	A	
218	STORAGE	LVT-1	RB	PNT-1	PNT-1	PNT-1	PNT-1	ACT-1	A	
219	STAIR	RF-1	RB	PNT-1	PNT-1	PNT-1	PNT-1	ACT-1	B / E	NEW RUBBER TREADS, RUBBER FLOORING, AND RUBBER BASE.

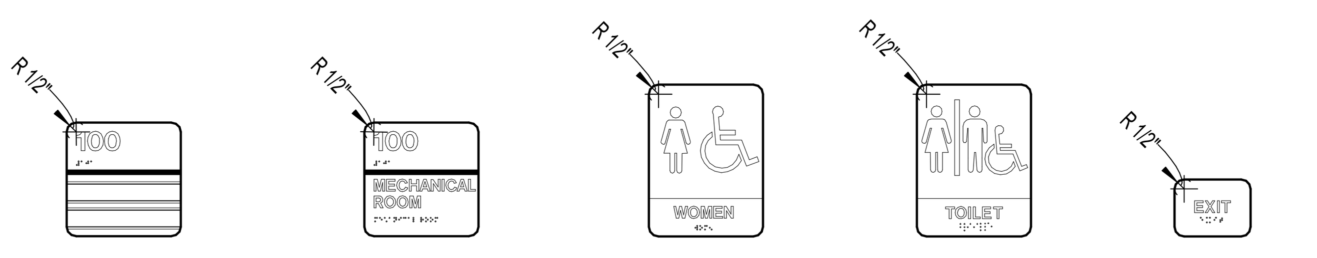

(A) CHANGEABLE COPY SIGN

(B) ROOM NUMBER / NAME SIGN

(C) SPECIFIC REST ROOM SIGN

(D) NEUTRAL REST ROOM SIGN

(E) EXIT SIGN

NOTES:

1. ALL ROOMS AND ENTRANCES TO A ROOM UNLESS NOTED OTHERWISE SHALL HAVE ONE SIGN.
2. SIGN TYPES INDICATED BY LETTER DESIGNATION, AS INDICATED, AND KEYED TO ROOM FINISH SCHEDULE.
3. ALL TOILETS SHALL HAVE A RESTROOM SIGN.
4. COORDINATE ROOM DESIGNATIONS AND NUMBERS WITH OWNER PRIOR TO ORDERING.
5. ALL SIGNAGE SHALL COMPLY WITH ALL APPLICABLE CODES.
6. CHANGEABLE COPY SIGNS SHALL HAVE TWO (2) LINES WITH NON-GLARE ACRYLIC FACES FOR OWNER INSERTS.
7. ALL COMPONENTS COLORS SHALL BE AS SELECTED BY ARCHITECT FROM MANUFACTURER'S FULL RANGE.
8. ALL SIGNS SHALL BE LOCATED ON STRIKE SIDE OF DOOR AND SHALL BE 48 INCHES MINIMUM AND 60 INCHES MAXIMUM FROM FINISH FLOOR TO BASELINE OF ALL BRAILLE CELLS. A CLEAR SPACE OF 18X18 INCHES SHALL BE LOCATED IN FRONT OF THE SIGN, CENTERED ON THE RAISED TEXT.

INTERIOR SIGNAGE

1 1/2" = 1'-0"

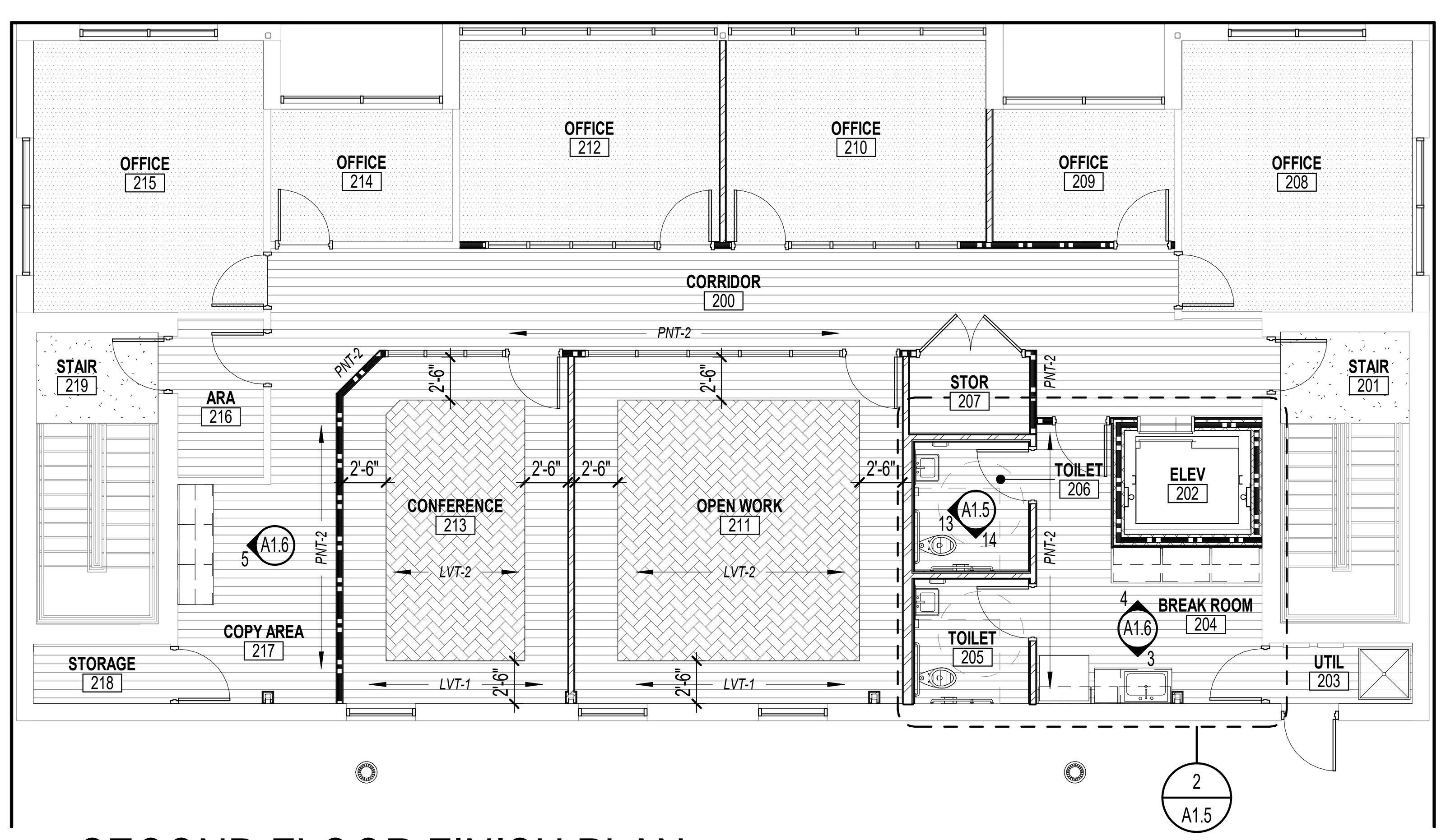

2 / A1.4 SECOND FLOOR FINISH PLAN

1/8" = 1'-0"

1 / A1.4 FIRST FLOOR FINISH PLAN

1/8" = 1'-0"

FINISH LEGEND

NOTE: WALL FINISHES ARE BASED ON PLAN DIRECTION (PLAN N, E, S, W).
PLAN DIRECTION REFERS TO ORIENTATION ON THIS SHEET.

WALL FINISH:

LEGEND:	MARK:	DESCR:	BASIS OF DESIGN:	NOTES:
-	PNT-1	WALL PAINT	SW7000 IBIS WHITE	OWNER TO APPROVE ALL PAINT COLORS BEFORE THEY ARE PROCURED AND INSTALLED.
-	PNT-1E	EPOXY PAINT	SW7000 IBIS WHITE	
-	PNT-2	WALL PAINT	SW6522 SPORTY BLUE	
	WT-1	WALL TILE	TRINITY TILE: SOLENE WHITE / TEXTURED 12" X 24"	

WALL BASE:

LEGEND:	MARK:	DESCR:	BASIS OF DESIGN:	NOTES:
-	RB	RUBBER BASE	JOHNSONITE	
-	TB	TILE BASE	SOLENE BULLNOSE WHITE / TEXTURED	

FLOOR FINISH:

LEGEND:	MARK:	DESCR:	BASIS OF DESIGN:	NOTES:
	LVT-1	LUXURY VINYL TILE / PLANK	MOHAWK: SECOYA 2.5 CHIMNEY OAK 917 STAGGERED PLANK INSTALL	INSTALL ALL LVT IN THE DIRECTION SHOWN ON THE FINISH PLAN.
	LVT-2	LUXURY VINYL TILE / PLANK	MOHAWK: SECOYA 2.5 CHIMNEY OAK 917 HERRINGBONE INSTALL	INSTALL ALL LVT IN THE DIRECTION SHOWN ON THE FINISH PLAN.
	CPT-1	CARPET TILE	TARKETT: ATTRACT AFFINITY (24201)	
	FT-1	FLOOR TILE	DALTILE: PORTFOLIO CHARCOAL 12" X 24"	INSTALL IN WOVEN PATTERN AS SHOWN ON THE PLAN. ADJUST EDGE ALIGNMENT AS NECESSARY TO MINIMIZE WASTE.
	FT-2	FLOOR TILE	DALTILE: PORTFOLIO CHARCOAL 12" X 12"	
	RF-1	RUBBER FLOORING	JOHNSONITE: COLOR SPLASH COZY CANYON CG (VF8)	

SURFACE FINISH:

LEGEND:	MARK:	DESCR:	BASIS OF DESIGN:	NOTES:
-	PL	PLASTIC LAMINATE	ARBORITE: OBSCURE OAK (W496 CW)	
-	QZ	QUARTZ	HANSTONE: ANTELLO (L0804)	

CEILING FINISH:

LEGEND:	MARK:	DESCR:	BASIS OF DESIGN:	NOTES:
-	ACT-1	ACOUSTIC CEILING TILE	SIZE: 2' x 2' COLOR: BY ARCHITECT	SEE SPECS.
-	GYP	-	GYPSUM WALL / CEILING BOARD	SEE SPECS.

FINISH PLAN NOTES

1. PATTERNS IN THE ABOVE LEGEND APPLY TO FINISH FLOOR PLAN AND INTERIOR ELEVATIONS ONLY.
2. SEE INTERIOR ELEVATIONS FOR FULL EXTENT OF WALL FINISHES AS KEYED IN PLANS. SEE FINISH SCHEDULE AND SPECIFICATIONS FOR ADDITIONAL INFORMATION.
3. VERIFY ALL DIMENSIONS AND CONDITIONS PRIOR TO INSTALLATION OF FINISHES.
4. TS = FURNISH AND INSTALL TRANSITION STRIP AT ALL FLOOR MATERIAL CHANGES AS SHOWN OR AS REQUIRED.
5. HEIGHT AND PROFILE OF ALL TRANSITIONS STRIPS SHALL COMPLY WITH HANDICAP CODE.
6. COORDINATE LOCATION OF ALL TRANSITION STRIPS WITH EXISTING AND NEW CONDITIONS. WHERE POSSIBLE, LOCATE TRANSITION STRIPS UNDER DOOR SLABS. NO EXPOSED SLAB PERMITTED IN FINISHED AREAS.
7. COORDINATE SIZE OF ALL TRANSITION STRIPS WITH FINISH MATERIALS.
8. COLOR FOR ALL TRANSITION STRIPS SHALL BE AS SELECTED BY ARCHITECT FROM MANUFACTURER'S FULL RANGE.
9. PROVIDE CORNER GUARDS AS INDICATED (CG). SEE SPECS FOR DETAIL.
10. MANUFACTURERS INDICATED ABOVE REPRESENT THE BASIS OF DESIGN; SEE SPECIFICATION SECTION 01 60 00 - PRODUCT REQUIREMENTS FOR SUBSTITUTION REQUESTS.

EQUIPMENT SCHEDULE & NOTES

1. ALL EQUIPMENT LISTED ABOVE IS TO BE O.S.C.I. (OWNER SUPPLIED, CONTRACTOR INSTALLED) AND SHALL BE FURNISHED BY THE OWNER AND INSTALLED BY CONTRACTOR. COORDINATE INSTALLATION WITH MANUFACTURER'S CUT SHEETS PROVIDED BY OWNER.
2. FINAL CONNECTION OF O.S.C.I. EQUIPMENT SHALL BE BY THE CONTRACTOR.
3. UTILITY CONNECTIONS SHALL BE FURNISHED AND INSTALLED BY THE CONTRACTOR AS DELINEATED IN THE PLANS AND AS REQUIRED TO MAKE EQUIPMENT OPERATIONAL.
4. ALL STRUCTURAL SUPPORT AND CONNECTIONS SHALL BE FURNISHED AND INSTALLED BY THE CONTRACTOR AS DELINEATED IN THE PLANS.
5. FURNISH AND INSTALL ALL BLOCKING AS REQUIRED FOR PROPER INSTALLATION OF ALL WALL MOUNTED EQUIPMENT. COORDINATE SIZE AND LOCATION OF BLOCKING WITH EQUIPMENT/OWNER.
6. ALL ITEMS NOT TAGGED ON EQUIPMENT PLAN INCLUDING MISCELLANEOUS TABLES, CHAIRS, DESKS AND OFFICE FURNITURE SHALL BE FURNISHED AND INSTALLED BY THE OWNER AND ARE NOT INCLUDED IN CONTRACT.

OCA OAKLEY COLLIER ARCHITECTS
109 Candlewood Road, Rocky Mount, NC 27804 (P) 252.937.2500
205 W. Martin Street, Raleigh, NC 27601

RENOVATION FOR:
CRAVEN COUNTY GOVERNMENT CENTER EAST
CRAVEN COUNTY
1208 E. MAIN STREET, HAVELOCK, NORTH CAROLINA 28532

OAKLEY COLLIER ARCHITECTS, P.A. REGISTERED ARCHITECTURAL CORPORATION CERT NO. 50681 NORTH CAROLINA ROCKY MOUNT, NC

TIMOTHY D. OAKLEY REGISTERED ARCHITECT NORTH CAROLINA ROCKY MOUNT, N.C. 05/30/26

GENERAL NOTE: Prior to construction start. Contractor shall verify & be responsible for all Dimensions.

Revisions: # Description Date

Date: MAY 30 2026 | Project No.: 25012
Drawn By: ACR | Checked By: DG | Sheet No.: A1.4
Sheet Title: FINISH PLANS

Copyright © 2025 Oakley Collier Architects. These drawings are of the property of the Architect for use under his supervision. No reproduction or other use is allowed without permission.

TOILET ACCESSORIES SCHEDULE

TAG	DESCRIPTION	MANUF.	MODEL NO.
PD	PAPER TOWEL DISPENSER	A.S.I.	0210
SD	SURFACE MOUNTED SOAP DISPENSER	A.S.I.	0347
MM	STAINLESS STEEL FRAMED MIRROR	A.S.I.	20650
TD	JUMBO TOILET PAPER DISPENSER	A.S.I.	0042
GB36	1 1/2" DIA. X 36" S.S. GRAB BAR - PEENED	A.S.I.	3800-36P
GB42	1 1/2" DIA. X 42" S.S GRAB BAR - PEENED	A.S.I.	3800-42P
GB18	1 1/2" DIA. X 18" S.S (VERTICAL) GRAB BAR - PEENED	A.S.I.	3800-18P
US	COMBO UTILITY SHELF / MOP AND BROOM HOLDER	A.S.I.	1308-3

NOTES:

1. ALL TOILET ACCESSORIES SHALL BE INSTALLED PER MANUFACTURER'S RECOMMENDATIONS FOR SPECIFIC APPLICATIONS IN COMPLIANCE WITH ALL APPLICABLE CODES.
2. WHERE INDICATED AND AS REQUIRED, TOILET ACCESSORY INSTALLATION SHALL COMPLY WITH NC ACCESSIBILITY CODE.
3. FURNISH AND INSTALL ALL NECESSARY FRAMING AND BLOCKING AS REQUIRED FOR PROPER INSTALLATION AND OPERATION OF ALL ACCESSORIES.
4. MANUFACTURER AND MODEL NUMBERS INDICATED REPRESENT BASIS OF DESIGN. APPROVED EQUALS WILL BE ACCEPTED.

HC ACCESSORIES LEGEND

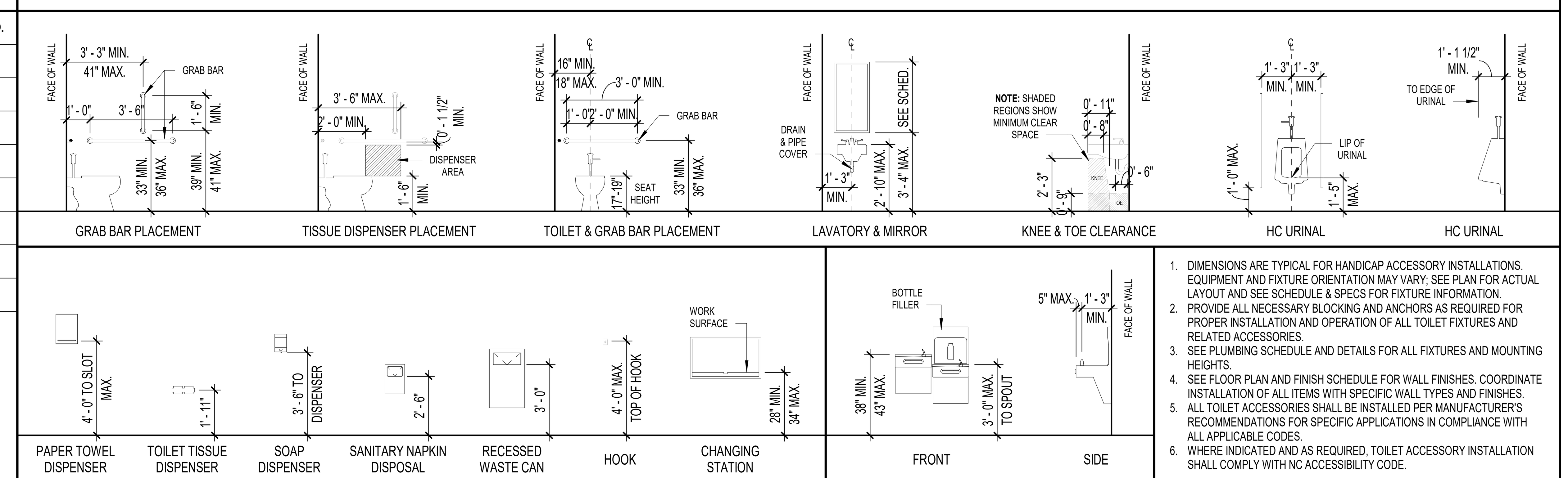

1. DIMENSIONS ARE TYPICAL FOR HANDICAP ACCESSORY INSTALLATIONS. EQUIPMENT AND FIXTURE ORIENTATION MAY VARY; SEE PLAN FOR ACTUAL LAYOUT AND SEE SCHEDULE & SPECS FOR FIXTURE INFORMATION.
2. PROVIDE ALL NECESSARY BLOCKING AND ANCHORS AS REQUIRED FOR PROPER INSTALLATION AND OPERATION OF ALL TOILET FIXTURES AND RELATED ACCESSORIES.
3. SEE PLUMBING SCHEDULE AND DETAILS FOR ALL FIXTURES AND MOUNTING HEIGHTS.
4. SEE FLOOR PLAN AND FINISH SCHEDULE FOR WALL FINISHES. COORDINATE INSTALLATION OF ALL ITEMS WITH SPECIFIC WALL TYPES AND FINISHES.
5. ALL TOILET ACCESSORIES SHALL BE INSTALLED PER MANUFACTURER'S RECOMMENDATIONS FOR SPECIFIC APPLICATIONS IN COMPLIANCE WITH ALL APPLICABLE CODES.
6. WHERE INDICATED AND AS REQUIRED, TOILET ACCESSORY INSTALLATION SHALL COMPLY WITH NC ACCESSIBILITY CODE.

NOTES

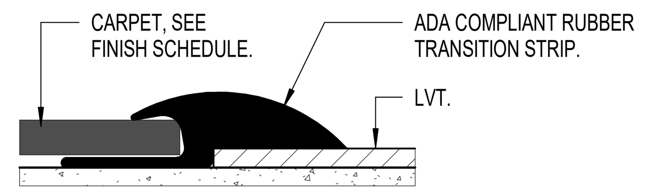

4 A1.5 CARPET/LVT TRANSITION
12" = 1'-0"

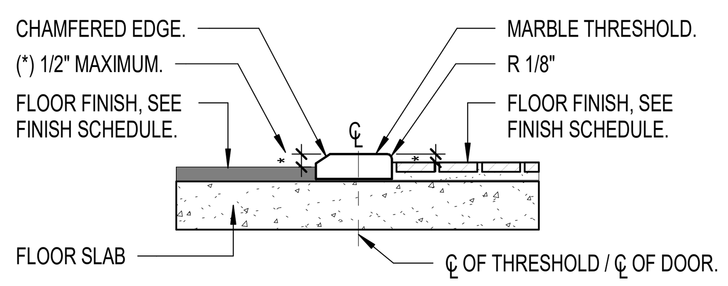

5 A1.5 MARBLE THRESHOLD
3" = 1'-0"

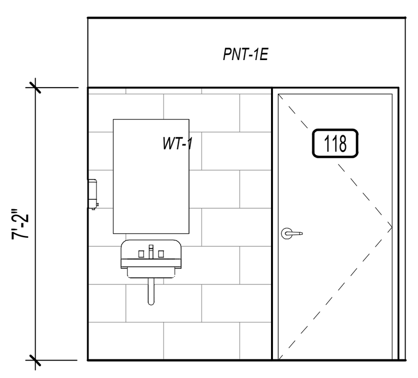

6 A1.5 T118E
1/4" = 1'-0"

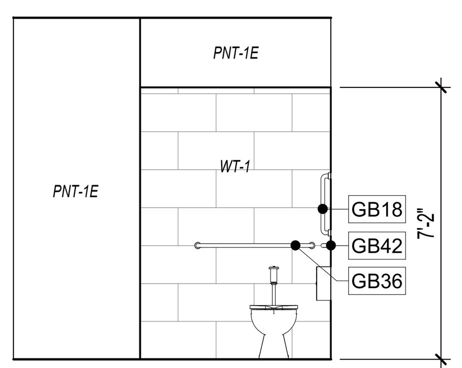

7 A1.5 T118W
1/4" = 1'-0"

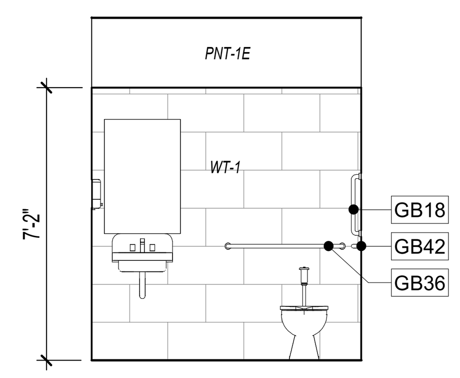

8 A1.5 TYPICAL TOILET
1/4" = 1'-0"

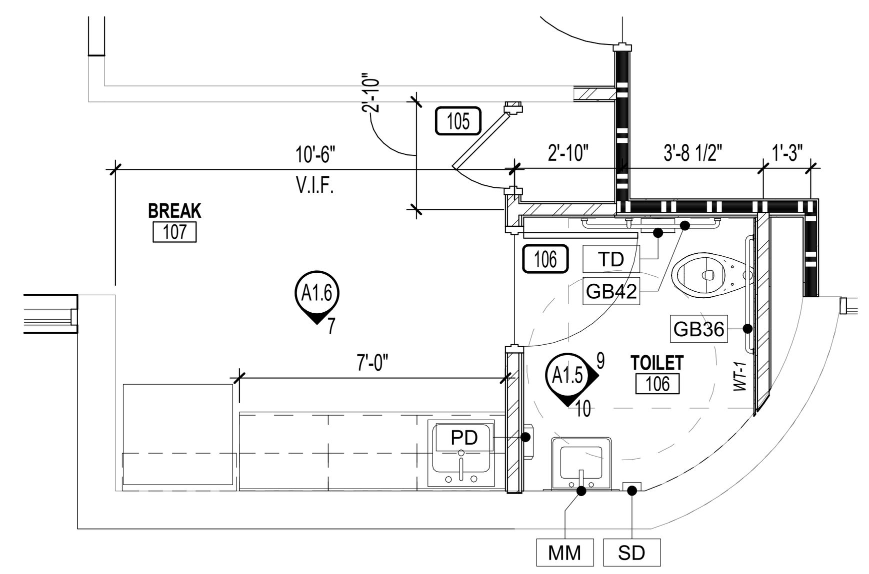

3 A1.5 FIRST FLOOR ENLARGED DMV BREAK
1/4" = 1'-0"

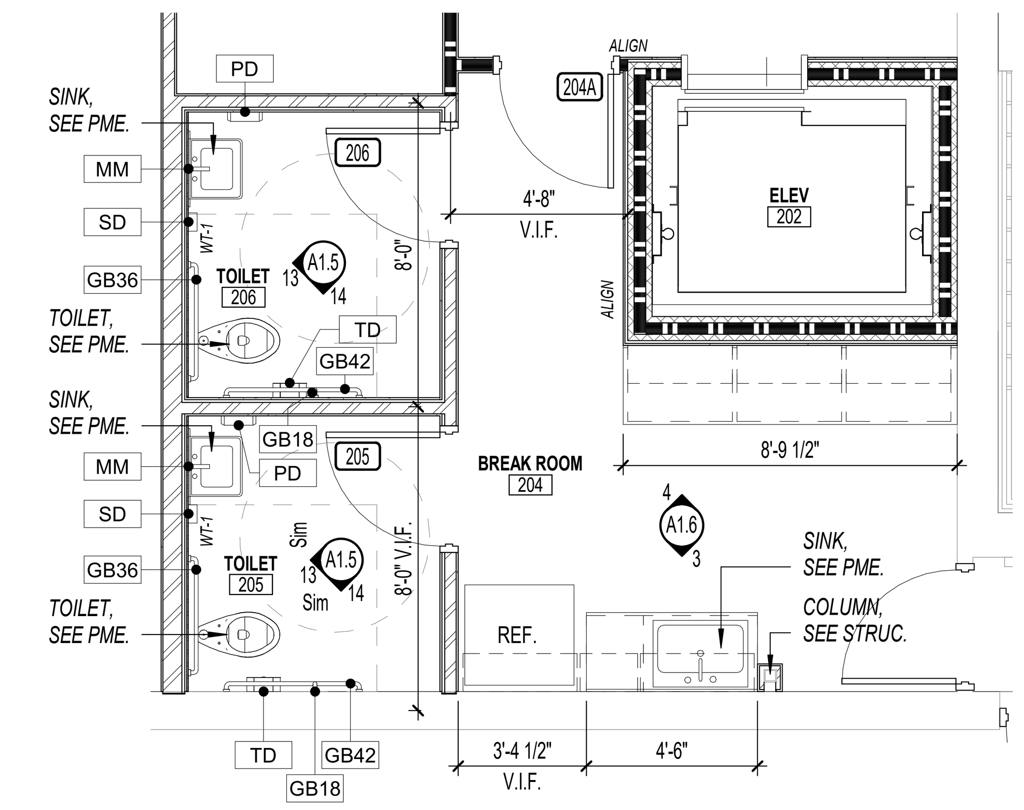

2 A1.5 SECOND FLOOR ENLARGED TOILETS AND BREAK
1/4" = 1'-0"

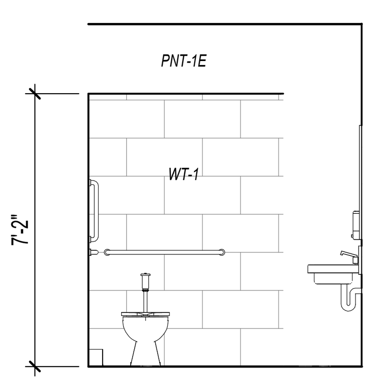

9 A1.5 T106E
1/4" = 1'-0"

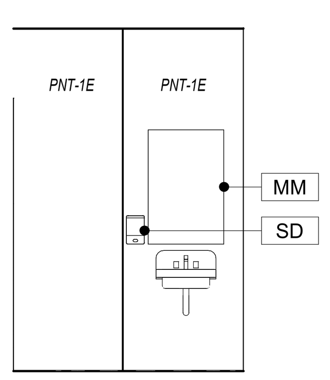

10 A1.5 T106S
1/4" = 1'-0"

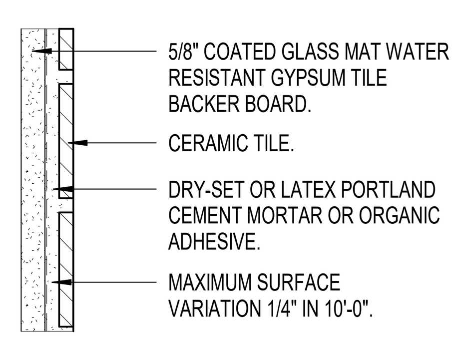

11 A1.5 TCA W245
3" = 1'-0"

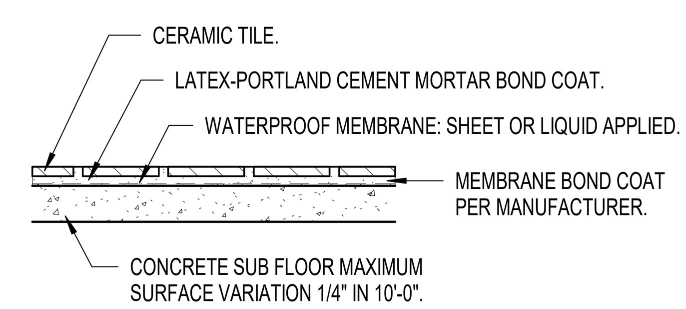

12 A1.5 TCA F122
3" = 1'-0"

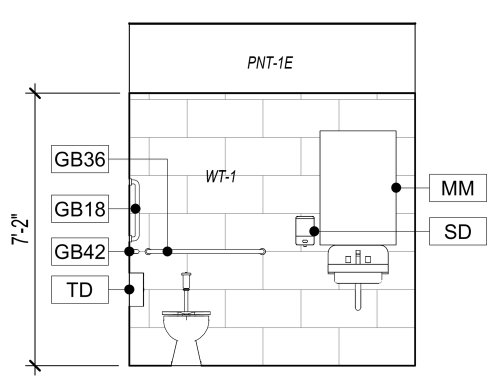

13 A1.5 T206W
1/4" = 1'-0"

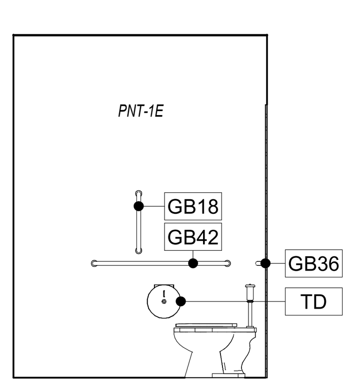

14 A1.5 T206S
1/4" = 1'-0"

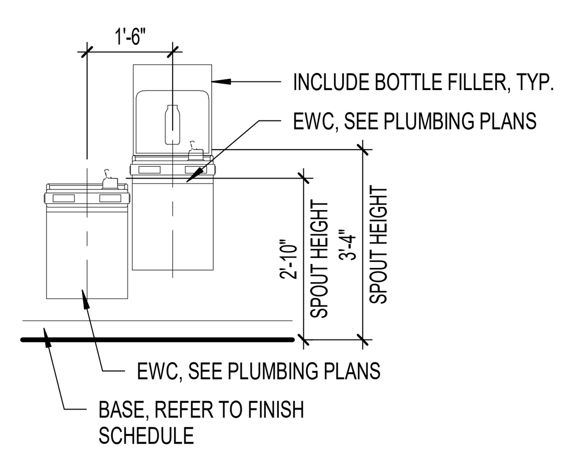

15 A1.5 EWC
3/8" = 1'-0"

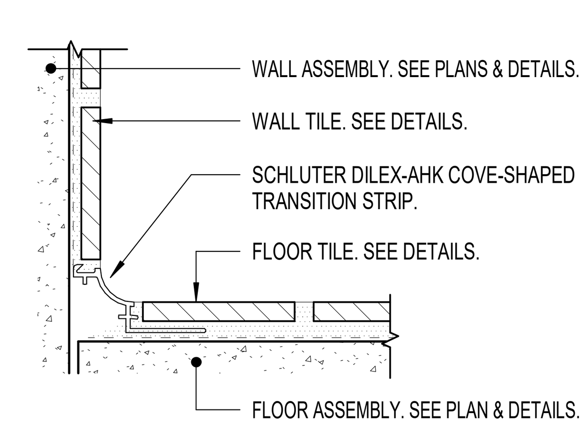

16 A1.5 FLOOR TO WALL TILE
6" = 1'-0"

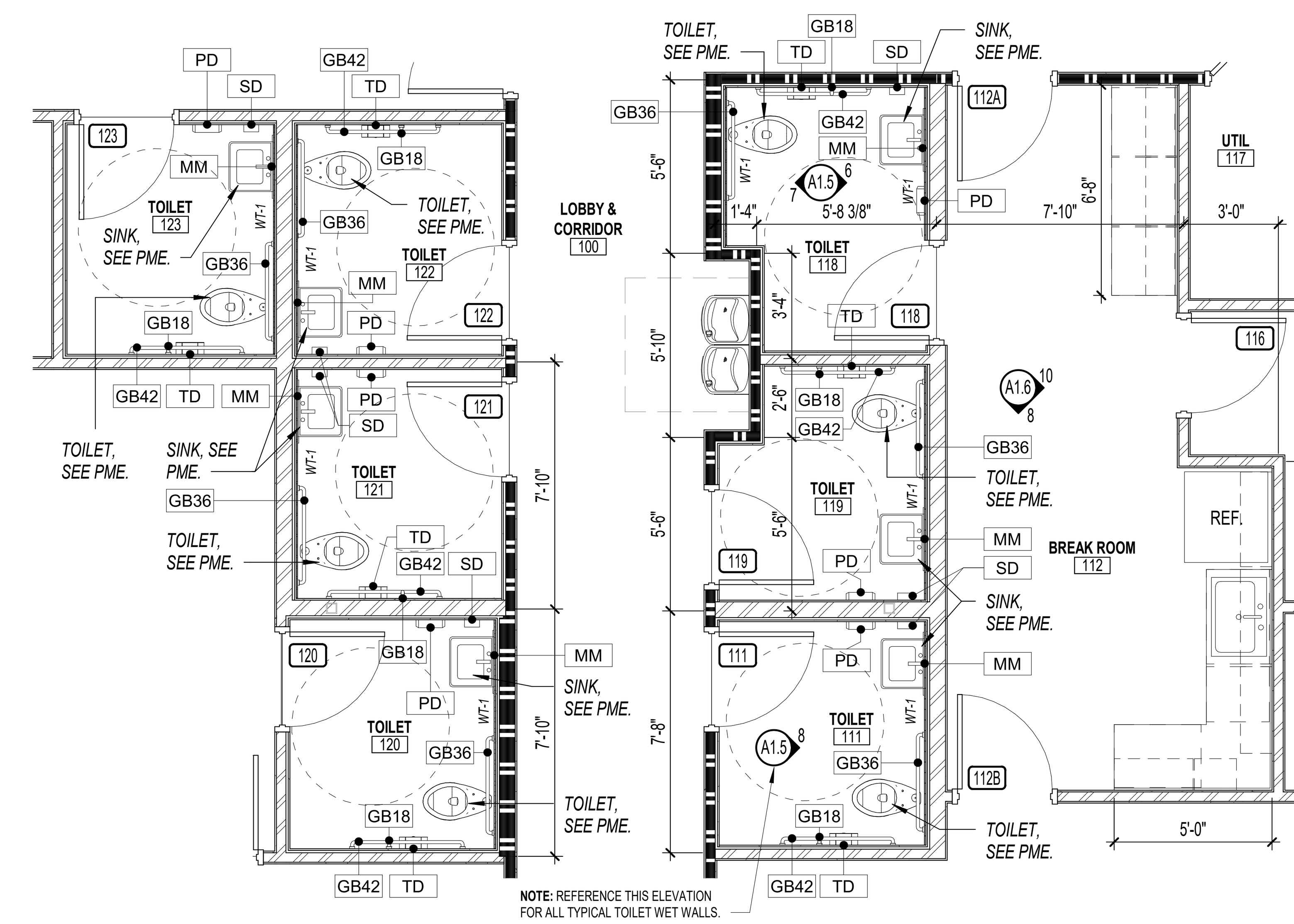

1 A1.5 FIRST FLOOR ENLARGED TOILETS AND BREAK
1/4" = 1'-0"

OAKLEY COLLIER ARCHITECTS
OCA
109 Candlewood Road, Rocky Mount, NC 27804 [P] 252.937.2500
205 W. Martin Street, Raleigh, NC 27601

RENOVATION FOR:
CRAVEN COUNTY GOVERNMENT CENTER EAST
CRAVEN COUNTY
1208 E. MAIN STREET, HAVELOCK, NORTH CAROLINA 28532

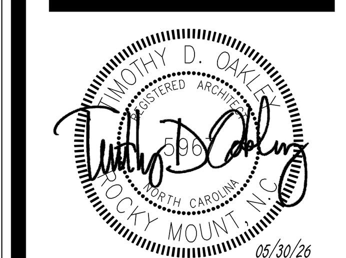

GENERAL NOTE:
Prior to construction start. Contractor shall verify & be responsible for all Dimensions.

Revisions

#	Description	Date

Date: MAY 30 2026	Project No.: 25012
Drawn By: ACR	Sheet No.: A1.5
Checked By: DG	

Sheet Title: ENLARGED PLANS & TOILET ELEVATIONS

Copyright © 2025 Oakley Collier Architects. These drawings are of the property of the Architect for use under his supervision. No reproduction or other use is allowed without permission.

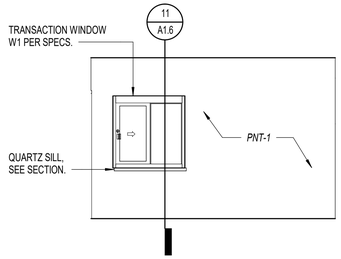

1 A1.6 125N ELEVATION
1/4" = 1'-0"

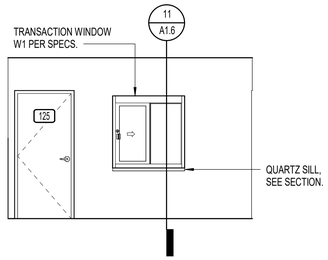

2 A1.6 125S ELEVATION
1/4" = 1'-0"

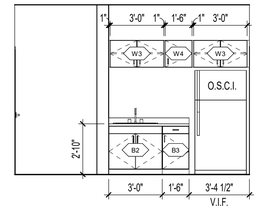

3 A1.6 204S ELEVATION
1/4" = 1'-0"

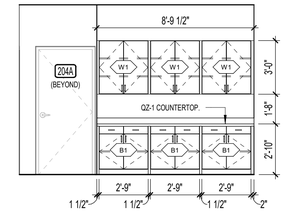

4 A1.6 204N ELEVATION
1/4" = 1'-0"

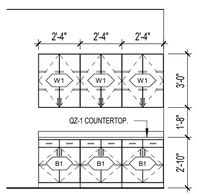

5 A1.6 217W ELEVATION
1/4" = 1'-0"

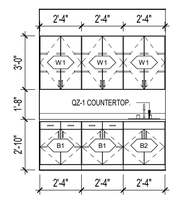

6 A1.6 126N ELEVATION
1/4" = 1'-0"

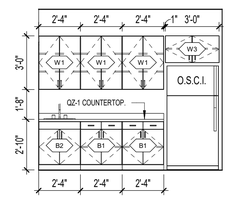

7 A1.6 107S ELEVATION
1/4" = 1'-0"

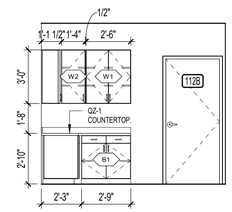

8 A1.6 112S ELEVATION
1/4" = 1'-0"

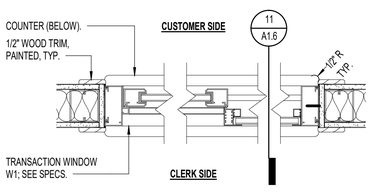

9 A1.6 TRANSACTION - JAMB SECTION
1 1/2" = 1'-0"

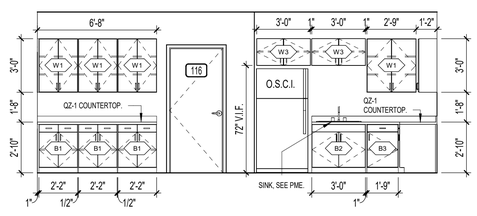

10 A1.6 112E ELEVATION
1/4" = 1'-0"

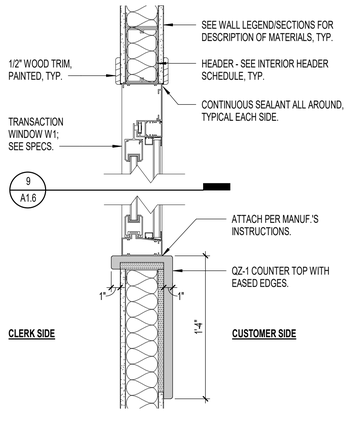

11 A1.6 TRANSACTION - HEAD & SILL
1 1/2" = 1'-0"

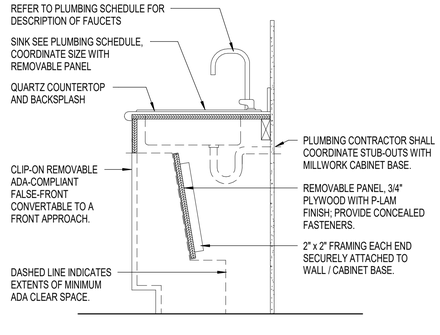

12 A1.6 ADA SINK CABINETRY
1" = 1'-0"

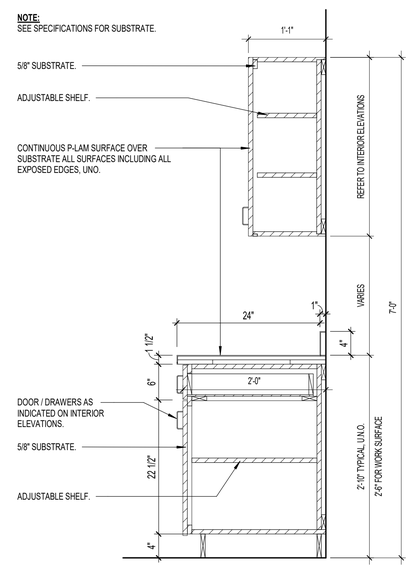

13 A1.6 CASEWORK SECTION, U.O.N.
1" = 1'-0"

CABINETRY NOTES

1. PROVIDE PLASTIC LAMINATE FINISH (PL-1) ON ALL EXPOSED SURFACES INCLUDING DOOR AND DRAWER EDGES. COLOR AND PATTERN AS SELECTED BY ARCHITECT FROM MANUFACTURER'S FULL RANGE.
2. PROVIDE QUARTZ FINISH ON ALL COUNTER TOPS UNLESS NOTED OTHERWISE. COLOR AND PATTERN AS SELECTED BY ARCHITECT FROM MANUFACTURER'S FULL RANGE.
3. PROVIDE MELAMINE FINISH ON ALL INTERIOR SURFACES AS SPECIFIED. COLOR AS SELECTED BY OWNER FROM MANUFACTURER'S FULL RANGE.
4. PROVIDE STANDARD "WIRE" DOOR AND DRAWER PULLS, TYPICAL.
5. PROVIDE CONCEALED HINGES FOR ALL DOORS, TYPICAL.
6. PROVIDE FULL EXTENSION SLIDES ON ALL DRAWERS.
7. PROVIDE 3/4" MELAMINE FINISH ADJUSTABLE SHELVING FOR ALL UPPER AND BASE CABINETS AS INDICATED, TYPICAL. PRE-DRILL HOLES AT 1 1/4" O.C. AND PROVIDE METAL SHELF CLIPS.
8. PROVIDE 3/4" THICK DRAWER AND DOOR FACES, TYPICAL.
9. PROVIDE FILLER PANELS AS NECESSARY.
10. FIELD VERIFY ALL DIMENSIONS, SQUARE AND PLUMB OF WALLS TO ENSURE PROPER FIT OF ALL CABINETRY, TYPICAL.
11. SUBMIT SHOP DRAWINGS PER SPECIFICATIONS OF ALL CABINETRY AND RELATED ITEMS FOR REVIEW PRIOR TO FABRICATION, TYPICAL.
12. FURNISH AND INSTALL ALL BLOCKING AS REQUIRED FOR PROPER INSTALLATION OF ALL CABINETRY, COORDINATE INSTALLATION OF BLOCKING WITH CABINET SUPPLIER.
13. ALL APPLICANCES WILL BE FURNISHED BY THE OWNER AND INSTALLED BY THE CONTRACTOR. VERIFY APPLIANCE SIZES WITH MANUFACTURER'S CUT SHEETS. CUT SHEETS SHALL BE PROVIDED BY THE OWNER.

CASEWORK NOTES & LEGENDS

MARK	DESCRIPTION
B1	2'-0" DEEP BASE CABINET; TWO HINGED DOORS AND TWO 6" HIGH DRAWERS AND ONE ADJUSTABLE SHELF. PROVIDE FIXED VERTICAL DIVIDER IN UNITS MORE THAN 3'-0" WIDE. HEIGHT/WIDTH VARIES.
B2	2'-0" SINK CABINET; TWO HINGED DOORS WITH ATTACHED BASEBOARD. SEE SECTION THROUGH TYPICAL ADA SINK CABINETRY. CABINET IS TO HAVE A REMOVABLE FALSE FRONT TO CONVERT TO AN ADA-COMPLIANT FRONT APPROACH.
B3	2'-0" DEEP BASE CABINET; ONE HINGED DOOR WITH ONE ADJUSTABLE SHELF, ONE 6" HIGH DRAWER. HEIGHT/WIDTH VARIES.
W1	1'-0" DEEP WALL CABINET; TWO HINGED DOORS & TWO ADJUSTABLE SHELVES. PROVIDE FIXED VERTICAL DIVIDER IN UNITS MORE THAN 3'-0" WIDE. HEIGHT/WIDTH VARIES. FOR HEIGHTS OVER 4'-0" INCREASE TO THREE ADJUSTABLE SHELVES.
W1	1'-0" DEEP WALL CABINET; ONE HINGED DOOR & TWO ADJUSTABLE SHELVES. HEIGHT/WIDTH VARIES. FOR HEIGHTS OVER 4'-0" INCREASE TO THREE ADJUSTABLE SHELVES.
W3	1'-0" DEEP WALL CABINET; TWO HINGED DOORS & ONE ADJUSTABLE SHELF. PROVIDE FIXED VERTICAL DIVIDER IN UNITS MORE THAN 3'-0" WIDE. HEIGHT/WIDTH VARIES. FOR HEIGHTS OVER 4'-0" INCREASE TO THREE ADJUSTABLE SHELVES.
W4	1'-0" DEEP WALL CABINET; ONE HINGED DOOR & ONE ADJUSTABLE SHELF. HEIGHT/WIDTH VARIES.

1. ALL CASEWORK SHOWN IS MANUFACTURED PLASTIC LAMINATE CASEWORK, TYPICAL UNLESS NOTED OTHERWISE.
2. PROVIDE SUPPORT BRACKETS AS REQUIRED/RECOMMENED BY MANUFACTURER.
3. GC TO PROVIDE ALL BLOCKING REQUIRED BY CASEWORK MANUFACTURER.
4. PROVIDE LOCKS ON CASEWORK WHERE NOTED IN ELEVATIONS.

OAKLEY COLLIER ARCHITECTS
OCA
109 Candlewood Road, Rocky Mount, NC 27804 (P) 252.937.2500
205 W. Martin Street, Raleigh, NC 27601

RENOVATION FOR:
CRAVEN COUNTY GOVERNMENT CENTER EAST
CRAVEN COUNTY
1208 E. MAIN STREET, HAVELOCK, NORTH CAROLINA 28532

OAKLEY COLLIER ARCHITECTS P.A. REGISTERED ARCHITECTURAL CORPORATION CERT NO. 50681 NORTH CAROLINA ROCKY MOUNT, NC

TIMOTHY D. OAKLEY REGISTERED ARCHITECT NORTH CAROLINA ROCKY MOUNT, N.C. 08/30/26

GENERAL NOTE:
Prior to construction start. Contractor shall verify & be responsible for all Dimensions.

Revisions

#	Description	Date

Date: MAY 30 2026	Project No.: 25012
Drawn By: ACR	Sheet No.: A1.6
Checked By: DG	

Sheet Title: CASEWORK ELEVATIONS & DETAILS

Copyright © 2025 Oakley Collier Architects. These drawings are of the property of the Architect for use under his supervision. No reproduction or other use is allowed without permission.

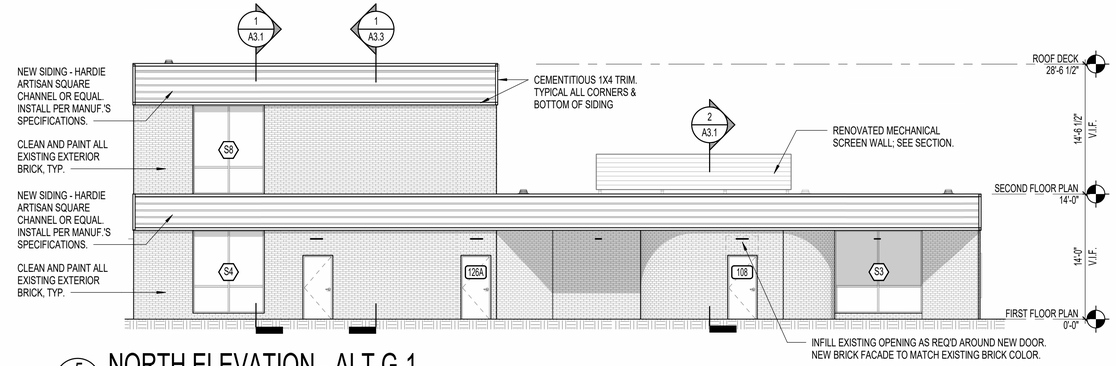

5 A2.1 NORTH ELEVATION - ALT G-1
1/8" = 1'-0"

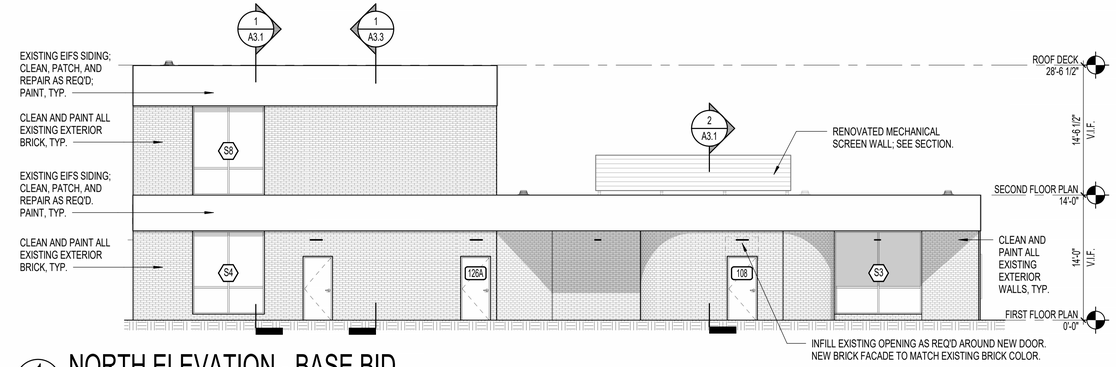

1 A2.1 NORTH ELEVATION - BASE BID
1/8" = 1'-0"

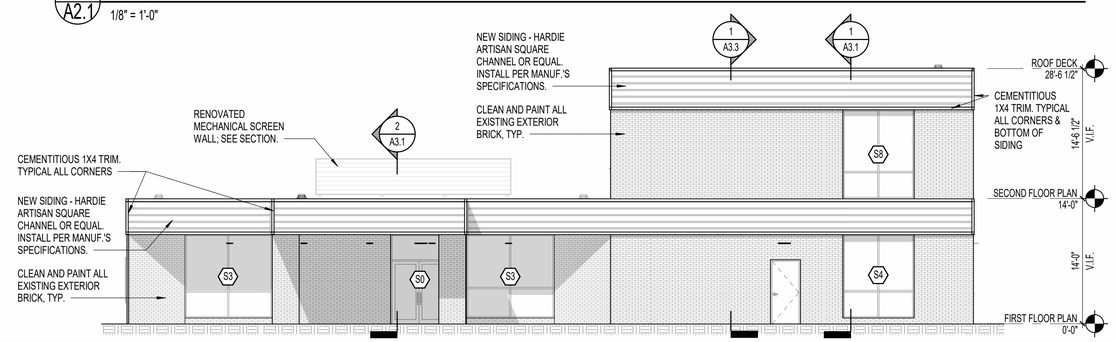

6 A2.1 SOUTH ELEVATION - ALT G-1
1/8" = 1'-0"

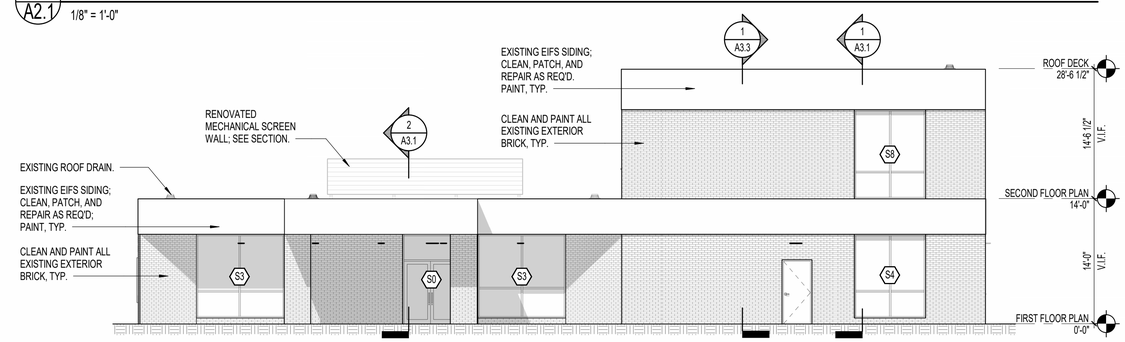

2 A2.1 SOUTH ELEVATION - BASE BID
1/8" = 1'-0"

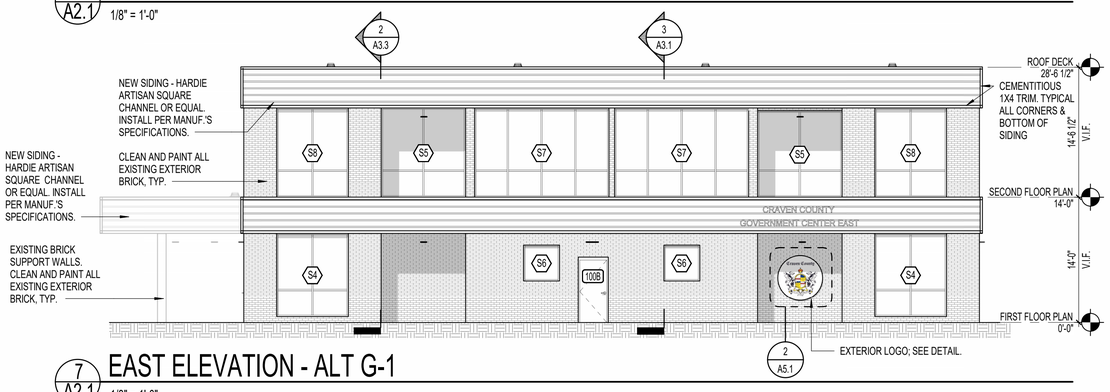

7 A2.1 EAST ELEVATION - ALT G-1
1/8" = 1'-0"

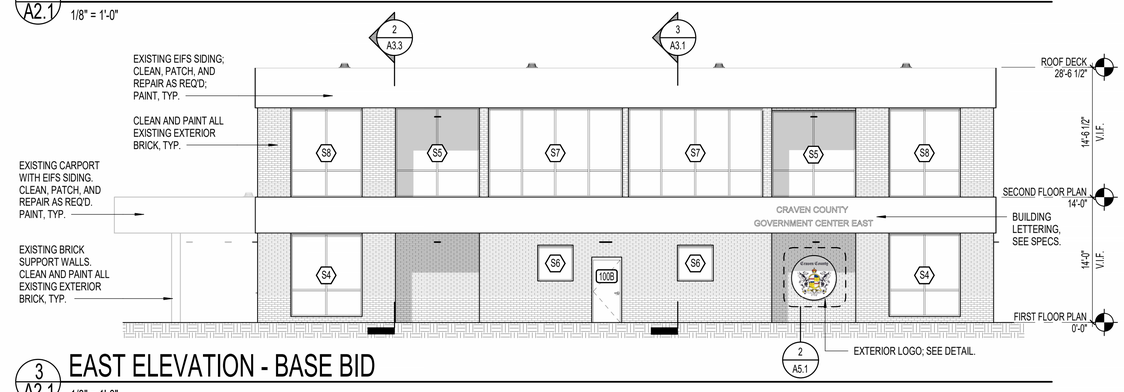

3 A2.1 EAST ELEVATION - BASE BID
1/8" = 1'-0"

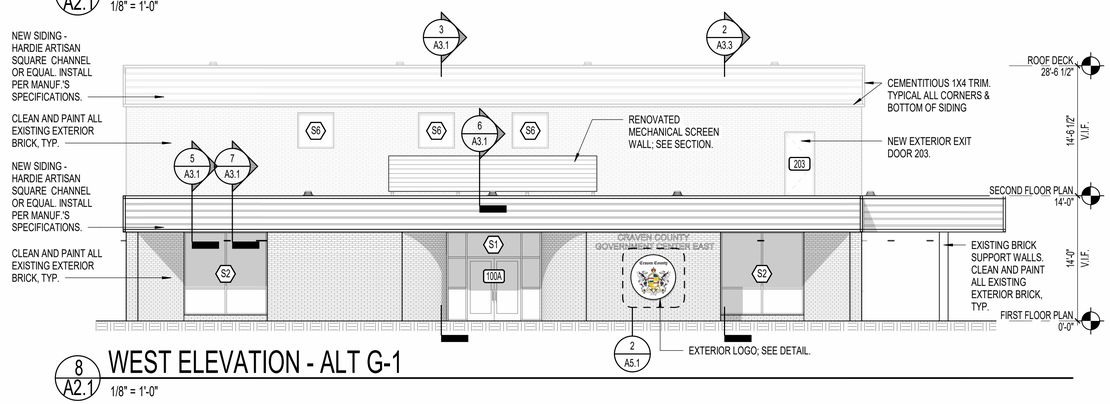

8 A2.1 WEST ELEVATION - ALT G-1
1/8" = 1'-0"

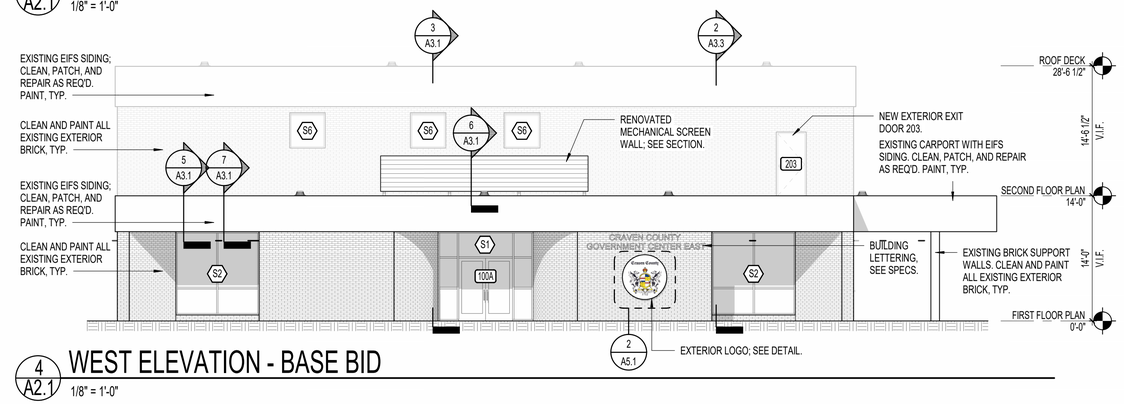

4 A2.1 WEST ELEVATION - BASE BID
1/8" = 1'-0"

Copyright © 2025 Oakley Collier Architects. These drawings are of the property of the Architect for use under his supervision. No reproduction or other use is allowed without permission.

OAKLEY COLLIER ARCHITECTS
OCA
109 Candlewood Road, Rocky Mount, NC 27804 [P] 252.937.2500
205 W. Martin Street, Raleigh, NC 27601

RENOVATION FOR:
CRAVEN COUNTY GOVERNMENT CENTER EAST
CRAVEN COUNTY
1208 E. MAIN STREET, HAVELOCK, NORTH CAROLINA 28532

OAKLEY COLLIER ARCHITECTS, P.A. REGISTERED ARCHITECTURAL CORPORATION CERT NO. 50681 NORTH CAROLINA ROCKY MOUNT, NC

TIMOTHY D. OAKLEY REGISTERED ARCHITECT NORTH CAROLINA ROCKY MOUNT, NC
05/30/26

GENERAL NOTE:
Prior to construction start. Contractor shall verify & be responsible for all Dimensions.

Revisions #	Description	Date

Date	Project No.
MAY 30 2026	25012
Drawn By: ACR	Sheet No. A2.1
Checked By: DG	

Sheet Title: BUILDING ELEVATIONS

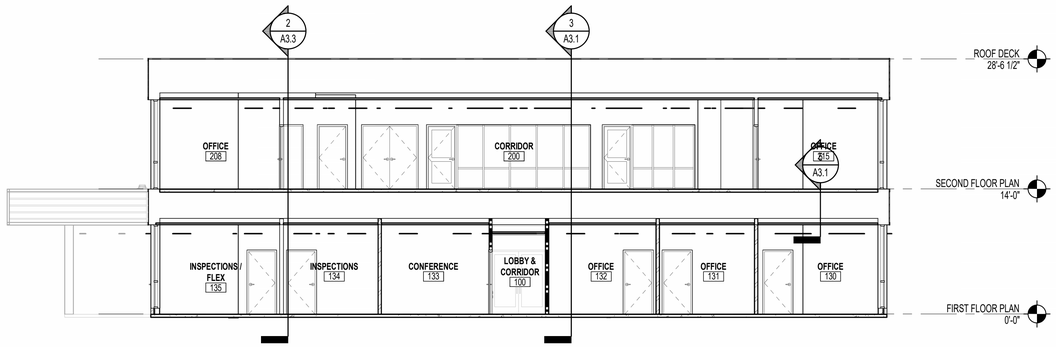

1 A3.1 E/W BUILDING SECTION 1

1/8" = 1'-0"

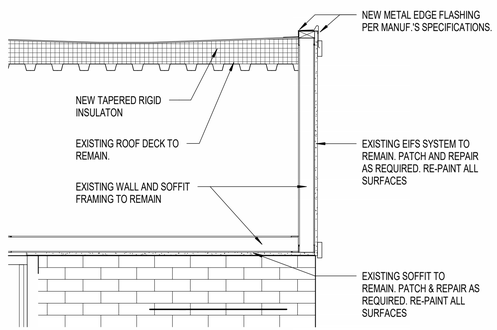

5 A3.1 WALL SECTION - BASE BID

3/4" = 1'-0"

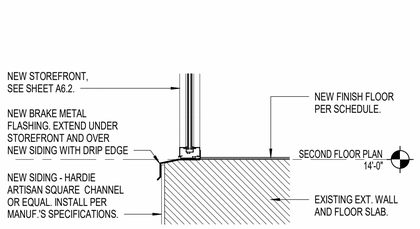

4 A3.1 SECOND FLOOR STOREFRONT SILL

3/4" = 1'-0"

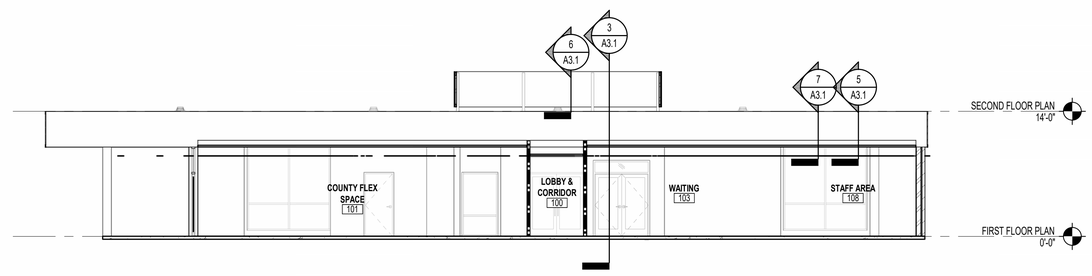

2 A3.1 E/W BUILDING SECTION 2

1/8" = 1'-0"

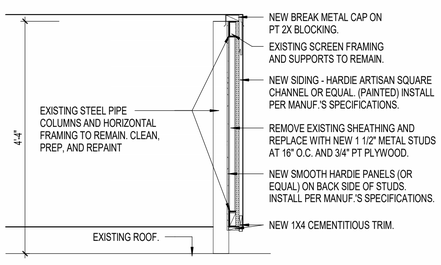

6 A3.1 SCREEN WALL RENO - BASE BID

3/4" = 1'-0"

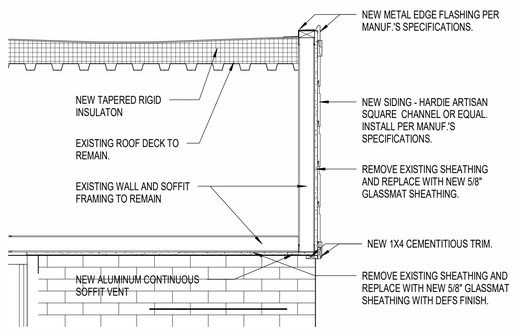

7 A3.1 WALL SECTION - ALTERNATE G-1

3/4" = 1'-0"

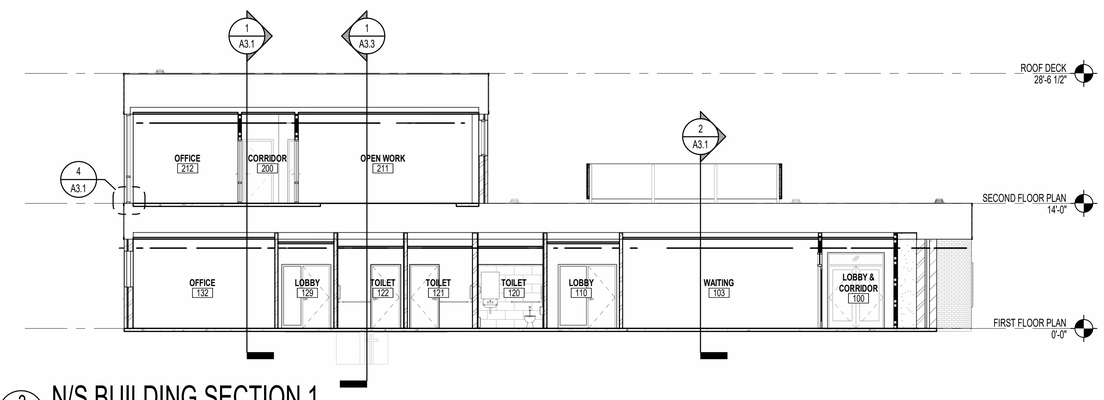

3 A3.1 N/S BUILDING SECTION 1

1/8" = 1'-0"

Copyright © 2025 Oakley Collier Architects. These drawings are of the property of the Architect for use under his supervision. No reproduction or other use is allowed without permission.

OAKLEY COLLIER ARCHITECTS
OCA
109 Candlewood Road, Rocky Mount, NC 27804 [P] 252.937.2500
205 W. Martin Street, Raleigh, NC 27601

RENOVATION FOR:
CRAVEN COUNTY GOVERNMENT CENTER EAST
CRAVEN COUNTY
1208 E. MAIN STREET, HAVELOCK, NORTH CAROLINA 28532

OAKLEY COLLIER ARCHITECTS, P.A.
REGISTERED ARCHITECTURAL CORPORATION
CERT NO. 50681
NORTH CAROLINA
ROCKY MOUNT, NC

TIMOTHY D. OAKLEY
REGISTERED ARCHITECT
NORTH CAROLINA
ROCKY MOUNT, NC
05/30/26

GENERAL NOTE:
Prior to construction start. Contractor shall verify & be responsible for all Dimensions.

Revisions #	Description	Date

Date	Project No.
MAY 30 2026	25012
Drawn By: ACR	Sheet No. A3.1
Checked By: DG	

Sheet Title
BUILDING SECTIONS & DETAILS

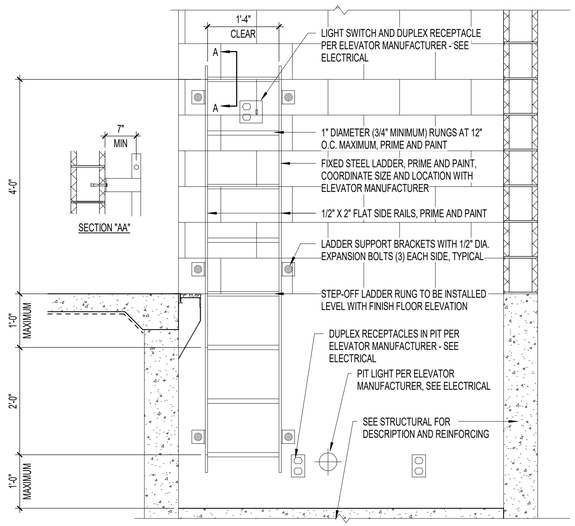

3 A3.3 ELEVATOR PIT DETAIL

3/4" = 1'-0"

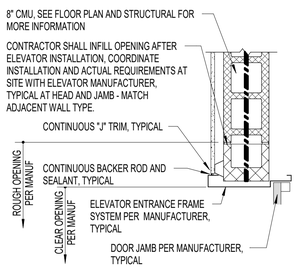

4 A3.3 ELEVATOR JAMB DETAIL

1" = 1'-0"

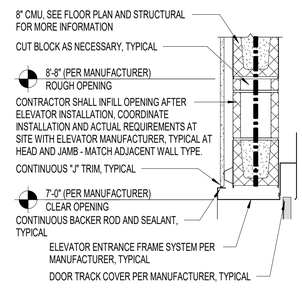

5 A3.3 ELEVATOR HEAD DETAIL

1" = 1'-0"

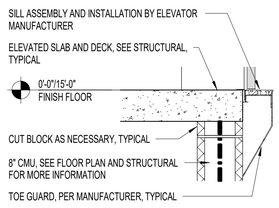

6 A3.3 ELEVATOR SILL DETAIL

1" = 1'-0"

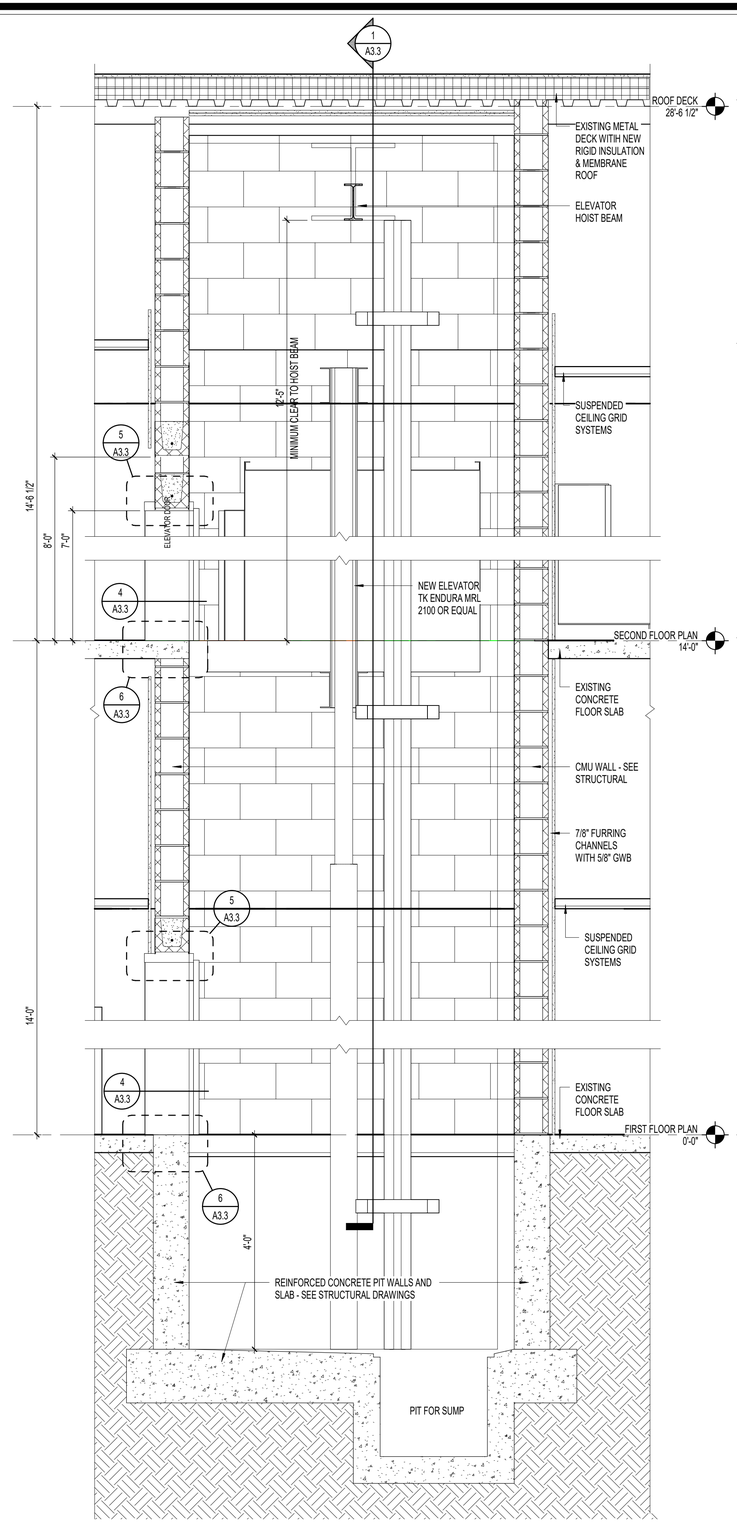

2 A3.3 ELEVATOR SECTION N/S

3/4" = 1'-0"

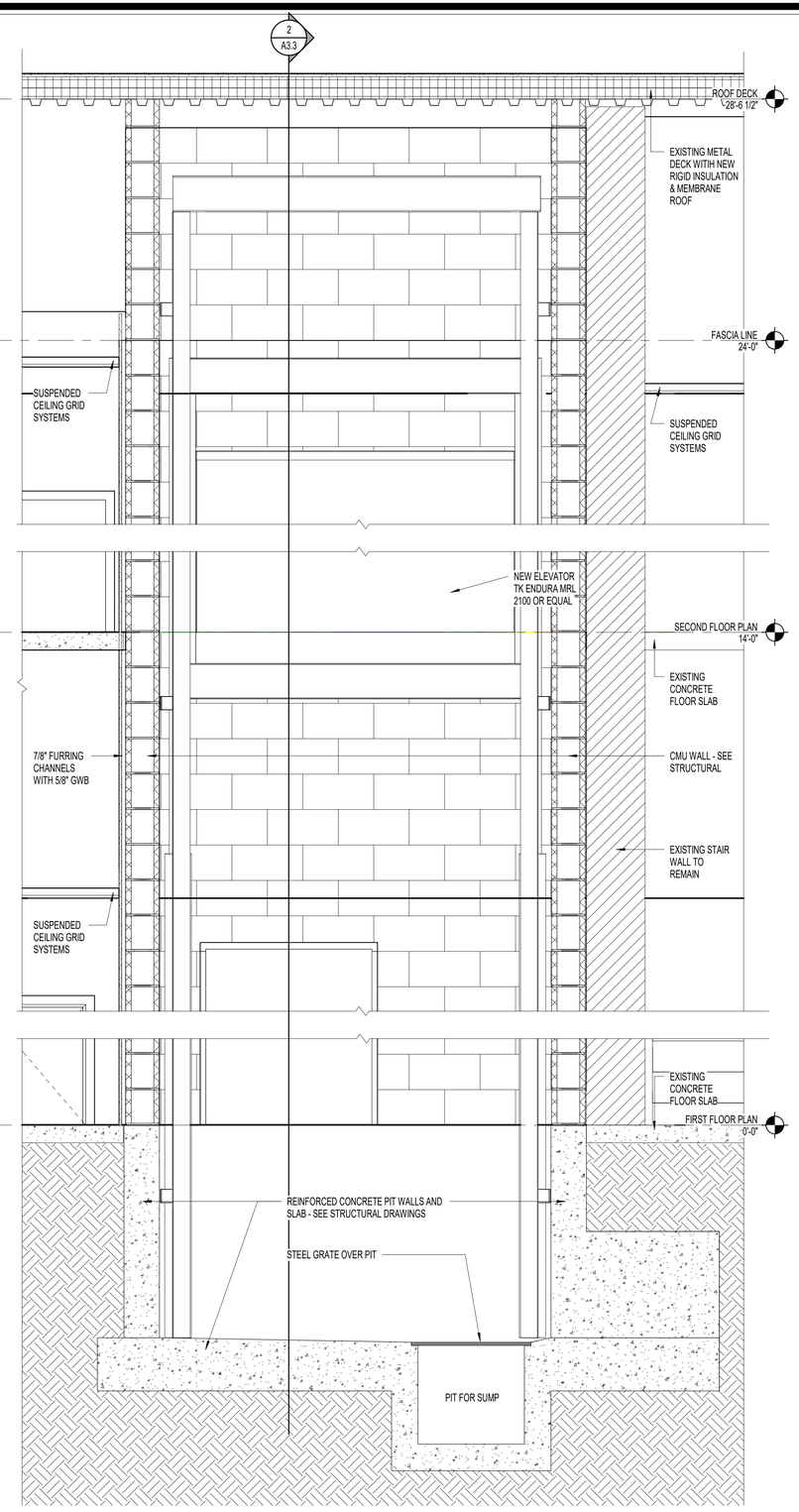

1 A3.3 ELEVATOR SECTION E/W

3/4" = 1'-0"

Copyright © 2025 Oakley Collier Architects. These drawings are of the property of the Architect for use under his supervision. No reproduction or other use is allowed without permission.

OAKLEY COLLIER ARCHITECTS
OCA
109 Candlewood Road, Rocky Mount, NC 27804 [P] 252.937.2500
205 W. Martin Street, Raleigh, NC 27601

RENOVATION FOR:
CRAVEN COUNTY GOVERNMENT CENTER EAST
CRAVEN COUNTY
1208 E. MAIN STREET, HAVELOCK, NORTH CAROLINA 28532

OAKLEY COLLIER ARCHITECTS P.A. CERT NO. 50681 NORTH CAROLINA ROCKY MOUNT, NC

TIMOTHY D. OAKLEY REGISTERED ARCHITECT NORTH CAROLINA ROCKY MOUNT, N.C. 05/30/26

GENERAL NOTE:
Prior to construction start. Contractor shall verify & be responsible for all Dimensions.

Revisions

#	Description	Date

Date: MAY 30 2026	Project No.: 25012
Drawn By: ACR	Sheet No.: A3.3
Checked By: DG	

Sheet Title: ELEVATOR SECTIONS

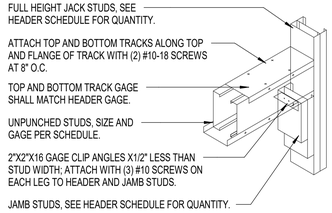

1 A6.1 TYP INT. HEADER DETAIL

1/2" = 1'-0"

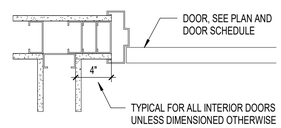

2 A6.1 DOOR PLACEMENT

1 1/2" = 1'-0"

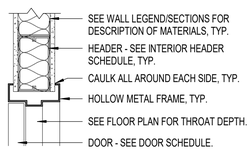

3 A6.1 HEAD DETAIL - HM DOOR

1 1/2" = 1'-0"

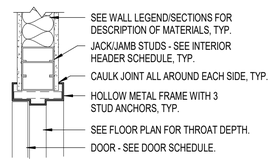

4 A6.1 JAMB DETAIL - HM DOOR

1 1/2" = 1'-0"

INTERIOR HEADER SCHEDULE

OPENING	SIZE	JACK	JAMB
0'-0" TO 5'-0"	3 5/8" X 20 GA.	2	2
5'-1" TO 7'-0"	6" X 20 GA.	2	2
7'-1" TO 10'-0"	8" X 20 GA.	2	3
10'-1" TO 18'-0"	10" X 16 GA.	3	4
18'-1" TO 25'-0"	12" X 16 GA.	3	4

ALL BOXED HEADERS SHALL BE SIZED TO FIT WALL SIZES SHOWN ARE MINIMUMS.

PROVIDE JACK AND JAMB STUDS AT EACH INTERIOR HEADER LOCATION AS SCHEDULED UNLESS NOTED OTHERWISE ON ARCHITECTURAL OR STRUCTURAL PLANS.

SEE STRUCTURAL PLANS FOR ALL EXTERIOR HEADERS.

DOOR SCHEDULE

DOOR NUMBER	DOOR SIZE WIDTH	DOOR SIZE HEIGHT	DOOR SIZE THICKNESS	DOOR DESCRIPTION MATERIAL	DOOR DESCRIPTION FINISH	DOOR DESCRIPTION GLAZING	DOOR DESCRIPTION ELEVATION	DOOR DESCRIPTION RATING	FRAME DESCRIPTION MATERIAL	FRAME DESCRIPTION FINISH	FRAME DESCRIPTION ELEVATION	FRAME DESCRIPTION RATING	REMARKS	DOOR NUMBER
100A	6'-0"	7'-0"	1 3/4"	ALUM	PRE-FINISHED	SEE STOREFRONT ELEV.	S1	N/A	ALUM	PRE-FINISHED	S1	N/A	MAIN ENTRY DOOR.	100A
100B	3'-0"	7'-0"	1 3/4"	HM	PAINTED	NONE	D1	N/A	HM	PAINTED	F2	N/A	NO EXTERIOR ENTRY HARDWARE. PANIC HARDWARE	100B
101A	6'-0"	7'-0"	1 3/4"	S.C. WOOD	STAINED	BY MANUF.	D7	20 MIN	HM	PAINTED	F4	20 MIN	RATED ASSEMBLY.	101A
101B	6'-0"	7'-0"	1 3/4"	ALUM	PRE-FINISHED	SEE STOREFRONT ELEV.	S0	N/A	ALUM	PRE-FINISHED	S0	N/A		101B
102	3'-0"	7'-0"	1 3/4"	ETR	ETR	ETR	ETR	ETR	ETR	ETR	ETR	ETR	EXISTING VAULT DOOR TO REMAIN. DEACTIVATE LOCKING MECHANISM.	102
103	6'-0"	7'-0"	1 3/4"	S.C. WOOD	STAINED	BY MANUF.	D7	20 MIN	HM	PAINTED	F4	20 MIN	RATED ASSEMBLY.	103
104	3'-0"	7'-0"	1 3/4"	S.C. WOOD	STAINED	NONE	D1	20 MIN	HM	PAINTED	F1	20 MIN		104
105	2'-0"	7'-0"	1 3/4"	S.C. WOOD	STAINED	NONE	D2	N/A	HM	PAINTED	F1	20 MIN	LOUVERED DOOR.	105
106	3'-0"	7'-0"	1 3/4"	S.C. WOOD	STAINED	NONE	D1	N/A	HM	PAINTED	F1	N/A	SOUND SEALS REQUIRED.	106
108	3'-0"	7'-0"	1 3/4"	HM	PAINTED	NONE	D1	N/A	HM	PAINTED	F2	N/A	INFILL SURROUNDING WALL WITH BRICK FACADE TO MATCH EXISTING.	108
109	3'-0"	7'-0"	1 3/4"	S.C. WOOD	STAINED	SG-CT	D3	N/A	HM	PAINTED	F1	N/A		109
110	3'-0"	7'-0"	1 3/4"	S.C. WOOD	STAINED	RSG-CT	D5	20 MIN	HM	PAINTED	F3	N/A		110
111	3'-0"	7'-0"	1 3/4"	S.C. WOOD	STAINED	NONE	D1	20 MIN	HM	PAINTED	F1	20 MIN	SOUND SEALS REQUIRED.	111
112A	3'-0"	7'-0"	1 3/4"	S.C. WOOD	STAINED	RSG-CT	D3	20 MIN	HM	PAINTED	F1	20 MIN		112A
112B	3'-0"	7'-0"	1 3/4"	S.C. WOOD	STAINED	NONE	D1	N/A	HM	PAINTED	F1	N/A		112B
113	6'-0"	7'-0"	1 3/4"	S.C. WOOD	STAINED	NONE	D6	N/A	HM	PAINTED	F1	N/A		113
114A	3'-0"	7'-0"	1 3/4"	HM	PAINTED	NONE	D1	N/A	HM	PAINTED	F2	N/A		114A
114B	3'-0"	7'-0"	1 3/4"	HM	PAINTED	RSG-CT	D3	60 MIN	HM	PAINTED	F2	60 MIN		114B
116	3'-0"	7'-0"	1 3/4"	S.C. WOOD	STAINED	NONE	D1	N/A	HM	PAINTED	F1	N/A		116
117	3'-0"	7'-0"	1 3/4"	S.C. WOOD	STAINED	NONE	D1	20 MIN	HM	PAINTED	F1	N/A		117
118	3'-0"	7'-0"	1 3/4"	S.C. WOOD	STAINED	NONE	D1	N/A	HM	PAINTED	F1	N/A	SOUND SEALS REQUIRED.	118
119	3'-0"	7'-0"	1 3/4"	S.C. WOOD	STAINED	NONE	D1	20 MIN	HM	PAINTED	F1	20 MIN	SOUND SEALS REQUIRED.	119
120	3'-0"	7'-0"	1 3/4"	S.C. WOOD	STAINED	NONE	D1	N/A	HM	PAINTED	F1	N/A	SOUND SEALS REQUIRED.	120
121	3'-0"	7'-0"	1 3/4"	S.C. WOOD	STAINED	NONE	D1	20 MIN	HM	PAINTED	F1	20 MIN	SOUND SEALS REQUIRED.	121
122	3'-0"	7'-0"	1 3/4"	S.C. WOOD	STAINED	NONE	D1	20 MIN	HM	PAINTED	F1	20 MIN	SOUND SEALS REQUIRED.	122
123	3'-0"	7'-0"	1 3/4"	S.C. WOOD	STAINED	NONE	D1	N/A	HM	PAINTED	F1	N/A	SOUND SEALS REQUIRED.	123
124	3'-0"	7'-0"	1 3/4"	S.C. WOOD	STAINED	SG-CT	D3	N/A	HM	PAINTED	F1	N/A		124
125	3'-0"	7'-0"	1 3/4"	S.C. WOOD	STAINED	SG-CT	D3	N/A	HM	PAINTED	F1	N/A		125
126A	3'-0"	7'-0"	1 3/4"	HM	PAINTED	NONE	D1	N/A	HM	PAINTED	F1	N/A		126A
126B	3'-0"	7'-0"	1 3/4"	S.C. WOOD	STAINED	SG-CT	D3	N/A	HM	PAINTED	F1	N/A		126B
128A	3'-0"	7'-0"	1 3/4"	HM	PAINTED	NONE	D1	N/A	HM	PAINTED	F2	N/A		128A
128B	3'-0"	7'-0"	1 3/4"	HM	PAINTED	RSG-CT	D3	60 MIN	HM	PAINTED	F2	60 MIN		128B
129	3'-0"	7'-0"	1 3/4"	S.C. WOOD	STAINED	RSG-CT	D5	20 MIN	HM	PAINTED	F3	20 MIN		129
130	3'-0"	7'-0"	1 3/4"	S.C. WOOD	STAINED	SG-CT	D3	N/A	HM	PAINTED	F1	N/A		130
131	3'-0"	7'-0"	1 3/4"	S.C. WOOD	STAINED	SG-CT	D3	N/A	HM	PAINTED	F1	N/A		131
132	3'-0"	7'-0"	1 3/4"	S.C. WOOD	STAINED	SG-CT	D3	N/A	HM	PAINTED	F1	N/A		132
133	3'-0"	7'-0"	1 3/4"	S.C. WOOD	STAINED	RSG-CT	D4	20 MIN	HM	PAINTED	F1	20 MIN		133
134	3'-0"	7'-0"	1 3/4"	S.C. WOOD	STAINED	RSG-CT	D3	20 MIN	HM	PAINTED	F1	20 MIN		134
135	3'-0"	7'-0"	1 3/4"	S.C. WOOD	STAINED	RSG-CT	D3	20 MIN	HM	PAINTED	F1	20 MIN		135
201	3'-0"	7'-0"	1 3/4"	S.C. WOOD	STAINED	RSG-CT	D3	60 MIN	HM	PAINTED	F1	60 MIN		201
203	3'-0"	7'-0"	1 3/4"	HM	PAINTED	NONE	D1	N/A	HM	PAINTED	F2	N/A		203
204A	3'-0"	7'-0"	1 3/4"	S.C. WOOD	STAINED	RSG-CT	D4	20 MIN	HM	PAINTED	F1	20 MIN		204A
204B	3'-0"	7'-0"	1 3/4"	S.C. WOOD	STAINED	NONE	D1	N/A	HM	PAINTED	F1	N/A		204B
205	3'-0"	7'-0"	1 3/4"	S.C. WOOD	STAINED	NONE	D1	N/A	HM	PAINTED	F1	N/A	SOUND SEALS REQUIRED.	205
206	3'-0"	7'-0"	1 3/4"	S.C. WOOD	STAINED	NONE	D1	N/A	HM	PAINTED	F1	N/A	SOUND SEALS REQUIRED.	206
207	6'-0"	7'-0"	1 3/4"	S.C. WOOD	STAINED	NONE	D6	20 MIN	HM	PAINTED	F1	20 MIN		207
208	3'-0"	7'-0"	1 3/4"	S.C. WOOD	STAINED	RSG-CT	D4	N/A	HM	PAINTED	F1	20 MIN		208
209	3'-0"	7'-0"	1 3/4"	S.C. WOOD	STAINED	RSG-CT	D4	N/A	HM	PAINTED	F1	20 MIN		209
210	3'-0"	7'-0"	1 3/4"	ALUM	PRE-FINISHED	RSG-CT	D4	20 MIN	ALUM	PRE-FINISHED	S11	20 MIN	STOREFRONT ELEVATION S11.	210
211	3'-0"	7'-0"	1 3/4"	ALUM	PRE-FINISHED	RSG-CT	D4	20 MIN	ALUM	PRE-FINISHED	S10	20 MIN	STOREFRONT ELEVATION S10.	211
212	3'-0"	7'-0"	1 3/4"	ALUM	PRE-FINISHED	RSG-CT	D4	20 MIN	ALUM	PRE-FINISHED	S11	20 MIN	STOREFRONT ELEVATION S11.	212
213	3'-0"	7'-0"	1 3/4"	ALUM	PRE-FINISHED	RSG-CT	D4	20 MIN	ALUM	PRE-FINISHED	S9	20 MIN	STOREFRONT ELEVATION S9.	213
214	3'-0"	7'-0"	1 3/4"	S.C. WOOD	STAINED	RSG-CT	D4	20 MIN	HM	PAINTED	F1	20 MIN		214
215	3'-0"	7'-0"	1 3/4"	S.C. WOOD	STAINED	RSG-CT	D4	20 MIN	HM	PAINTED	F1	20 MIN		215
216	3'-0"	7'-0"	1 3/4"	S.C. WOOD	STAINED	RSG-CT	D3	60 MIN	HM	PAINTED	F1	60 MIN		216
218	3'-0"	7'-0"	1 3/4"	S.C. WOOD	STAINED	RSG-CT	D1	20 MIN	HM	PAINTED	F1	20 MIN		218
219	3'-0"	7'-0"	1 3/4"	HM	PAINTED	RSG-CT	D3	60 MIN	HM	PAINTED	F1	60 MIN		219

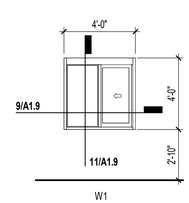

WINDOW - ELEVATION

1/4" = 1'-0"

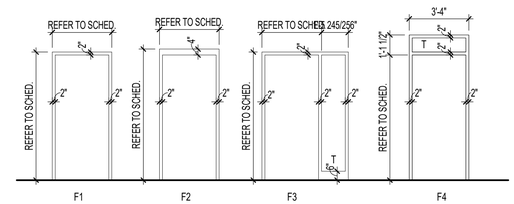

FRAME - ELEVATIONS

1/4" = 1'-0"

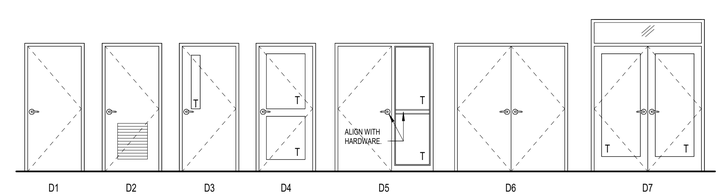

DOOR - ELEVATIONS

1/4" = 1'-0"

GENERAL DOOR NOTES

1. ALL HARDWARE SHALL MEET ALL APPLICABLE HANDICAP CODES.
2. TEMPERED GLAZING SHALL BE USED AS NOTED AND AS REQUIRED BY CODE.
3. EXTERIOR DOOR GLAZING SHALL BE 5/8" TEMPERED INSULATING, TYPICAL, U.N.O.
4. EXTERIOR DOOR GLAZING SHALL BE TINTED TO MATCH STOREFRONT GLAZING
5. FURNISH AND INSTALL DOOR CLOSERS AS SCHEDULED IN COMPLIANCE WITH ALL APPLICABLE CODES.
6. ALL HOLLOW METAL DOOR FRAMES SHALL BE FULLY WELDED TYPE, FACTORY PRIMED, AND FIELD PAINTED. COLOR PER ARCHITECT. INSTALL PER MANUFACTURER FOR PROPER INSTALLATION AND OPERATION FOR SPECIFIC APPLICATIONS.
7. ALL WOOD DOORS SHALL BE STAIN GRADE, SPECIES, AND COLOR PER ARCHITECT.
8. ALL ALUMINUM STOREFRONT AND DOORS SHALL BE PREFINISHED COLOR AS SELECTED BY ARCHITECT FROM MANUFACTURER'S FULL RANGE OF COLORS.
9. DOOR THRESHOLDS SHALL BE 1/2" MAXIMUM HEIGHT.
10. ALL EXISTING DOORS, ASSOCIATED DOOR HARDWARE, AND FRAMES TO REMAIN SHALL BE ACCESSED PRIOR TO RENOVATION. ALL EXISTING DOORS, DOOR HARDWARE, AND FRAMES TO REMAIN SHALL BE CLEANED & REFURBISHED TO MATCH PROJECT STANDARDS.

GLAZING

LEGEND		DESIGNATIONS	
IG	INSULATED GLASS	IG - 1 IG - 2	TINTED TINTED TEMPERED
SG	SAFETY GLASS	SG - C SG - CT	CLEAR CLEAR, TEMPERED
RSG	RATED SAFETY GLASS	RSG-C RSG-CT	RATED SAFETY GLASS, CLEAR RATED SAFETY GLASS, CLEAR, TEMPERED

Copyright © 2025 Oakley Collier Architects. These drawings are of the property of the Architect for use under his supervision. No reproduction or other use is allowed without permission.

OAKLEY COLLIER ARCHITECTS
OCA
109 Candlewood Road, Rocky Mount, NC 27804 [P] 252.937.2500
205 W. Martin Street, Raleigh, NC 27601

RENOVATION FOR:
CRAVEN COUNTY GOVERNMENT CENTER EAST
CRAVEN COUNTY
1208 E. MAIN STREET, HAVELOCK, NORTH CAROLINA 28532

OAKLEY COLLIER ARCHITECTS P.A. REGISTERED ARCHITECTURAL CORPORATION CERT. NO. 50681 NORTH CAROLINA ROCKY MOUNT, NC

TIMOTHY D. OAKLEY REGISTERED ARCHITECT NORTH CAROLINA ROCKY MOUNT, NC 05/30/26

GENERAL NOTE:
Prior to construction start. Contractor shall verify & be responsible for all Dimensions.

Revisions #	Description	Date

Date: MAY 30 2026	Project No.: 25012
Drawn By: ACR	Sheet No.: A6.1
Checked By: DG	

Sheet Title: DOOR SCHEDULE

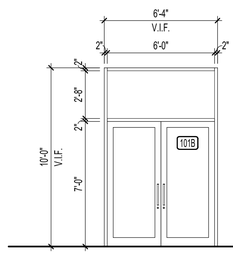

S0 ELEVATION

1/4" = 1'-0" EXTERIOR

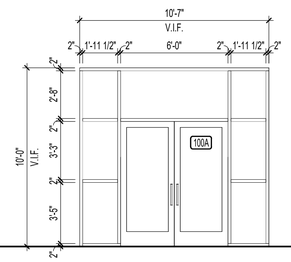

S1 ELEVATION

1/4" = 1'-0" EXTERIOR

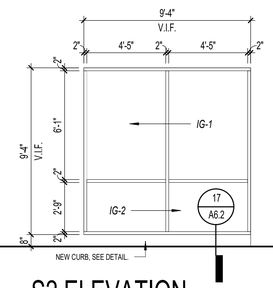

S2 ELEVATION

1/4" = 1'-0" EXTERIOR

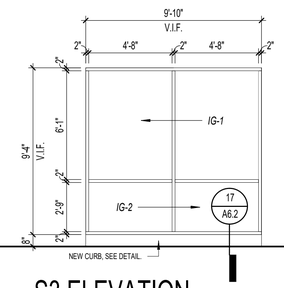

S3 ELEVATION

1/4" = 1'-0" EXTERIOR

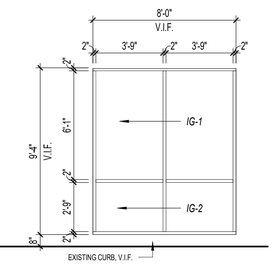

S4 ELEVATION

1/4" = 1'-0" EXTERIOR

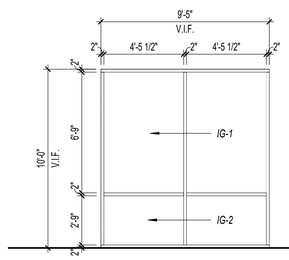

S5 ELEVATION

1/4" = 1'-0" EXTERIOR

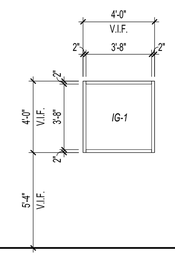

S6 ELEVATION

1/4" = 1'-0" EXTERIOR

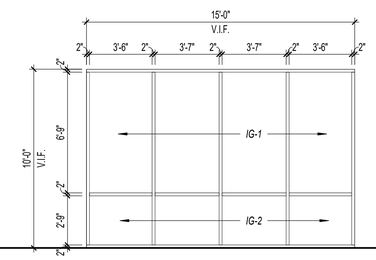

S7 ELEVATION

1/4" = 1'-0" EXTERIOR

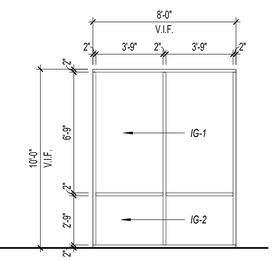

S8 ELEVATION

1/4" = 1'-0" EXTERIOR

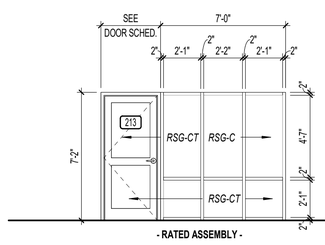

S9 ELEVATION

1/4" = 1'-0" INTERIOR

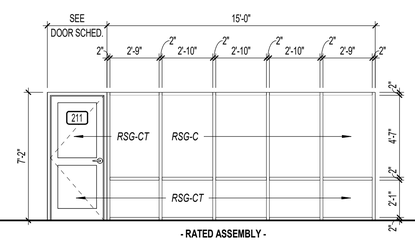

S10 ELEVATION

1/4" = 1'-0" INTERIOR

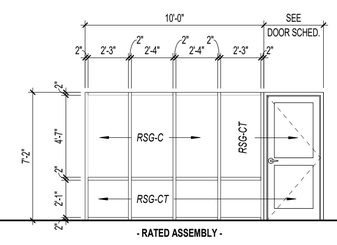

S11 ELEVATION

1/4" = 1'-0" INTERIOR

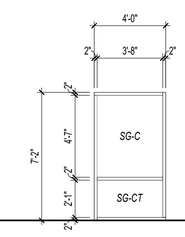

S12 ELEVATION

1/4" = 1'-0" INTERIOR

STOREFRONT NOTES

1. VERIFY ALL EXISTING ROUGH OPENINGS IN FIELD BEFORE PROCURING STOREFRONT.
2. ALL EXTERIOR STOREFRONT GLAZING SHALL BE OUTSIDE GLAZED 1" INSULATING TINTED GLASS AS NOTED IN SCHEDULE, TYPICAL.
3. PROVIDE ALL NECESSARY FRAME ANCHORS AS REQUIRED FOR SPECIFIC INSTALLATIONS.
4. ALL GLAZING WITHIN 24" OF VERTICAL EDGE OF DOORS SHALL BE TEMPERED. TEMPERED GLAZING SHALL BE USED AS NOTED AND AS REQUIRED BY CODE.
5. ALL FRAMING SYSTEMS SHALL BE DESIGNED, ENGINEERED AND FABRICATED BY THE SYSTEM MANUFACTURER TO MEET ALL APPLICABLE CODES. SHOP DRAWINGS SHALL BE SUBMITTED FOR REVIEW PRIOR TO FABRICATION.
6. ALL FRAMING DIMENSIONS AS SHOWN ARE ROUGH OPENING DIMENSIONS. CONTRACTOR SHALL VERIFY AND BE RESPONSIBLE FOR EXACT FINISH DIMENSION AT JOB SITE PRIOR TO FABRICATION.
7. HORIZONTAL LOUVER BLINDS SHALL BE FURNISHED AND INSTALLED ON ALL EXTERIOR WINDOWS.

GLAZING

LEGEND		DESIGNATIONS	
IG	INSULATED GLASS	IG - 1 IG - 2	TINTED TINTED TEMPERED
SG	SAFETY GLASS	SG - C SG - CT	CLEAR CLEAR, TEMPERED
RSG	RATED SAFETY GLASS	RSG-C RSG-CT	RATED SAFETY GLASS, CLEAR RATED SAFETY GLASS, CLEAR, TEMPERED

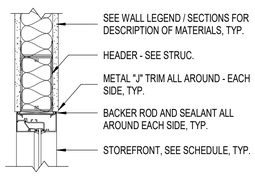

11 / A6.2 INT. STOREFRONT HEAD

1 1/2" = 1'-0"

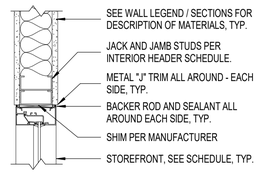

15 / A6.2 INT. STOREFRONT JAMB

1 1/2" = 1'-0"

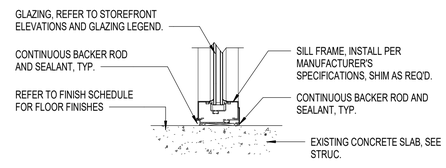

16 / A6.2 INT. STOREFRONT SILL

1 1/2" = 1'-0"

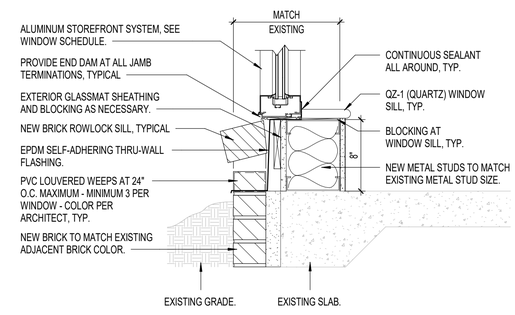

17 / A6.2 EXT. STOREFRONT SILL

1 1/2" = 1'-0"

Copyright © 2025 Oakley Collier Architects. These drawings are of the property of the Architect for use under his supervision. No reproduction or other use is allowed without permission.

OAKLEY COLLIER ARCHITECTS
OCA
109 Candlewood Road, Rocky Mount, NC 27804 [P] 252.937.2500
205 W. Martin Street, Raleigh, NC 27601

RENOVATION FOR:
CRAVEN COUNTY GOVERNMENT CENTER EAST
CRAVEN COUNTY
1208 E. MAIN STREET, HAVELOCK, NORTH CAROLINA 28532

OAKLEY COLLIER ARCHITECTS P.A. CERT NO. 50681 NORTH CAROLINA ROCKY MOUNT, N.C.

TIMOTHY D. OAKLEY REGISTERED ARCHITECT NORTH CAROLINA ROCKY MOUNT, N.C. 05/30/26

GENERAL NOTE:
Prior to construction start. Contractor shall verify & be responsible for all Dimensions.

Revisions

#	Description	Date

Date: MAY 30 2026	Project No.: 25012
Drawn By: ACR	Sheet No.: A6.2
Checked By: DG	

Sheet Title: STOREFRONT ELEVATIONS

VIEW KEY

NAME — LEVEL NAME
10'-0" — HEIGHT ABOVE PROJECT 0'-0"

1 — KEYNOTE: INDICATES NOTE USED TO DESCRIBE ADDITIONAL INFORMATION ABOUT WORK REQUIRED, SPECIFIC TO THE SHEET AND/OR DETAIL

INDICATES DIRECTION OF TRUE NORTH
PLAN OR DETAIL NUMBER
PLAN OR DETAIL NAME

NORTH 1 **VIEW NAME**
1/8" = 1'-0"
PLAN OR DETAIL SCALE

INDICATES SIMILAR DETAIL REFERENCED IN MULTIPLE LOCATIONS
DETAIL REFERRED TO BY SECTION CUT
SHEET DETAIL IS LOCATED ON

SIM 1 M101 — SIM 1 2 4 3 T101

LINE TYPE AND TAG KEY:

NEW WORK BY THIS CONTRACTOR (WIDE LINE)
NEW
EXISTING TO BE REMOVED (SHORT DASHED PATTERN)
NEW UNDERFLOOR OR UNDERGROUND (LONG DASHED PATTERN)

EXISTING TO REMAIN OR WORK BY OTHERS (NARROW LINE)
EXISTING
EXISTING TO BE REMOVED BY OTHERS (SHORT DASHED PATTERN)
EXISTING UNDERFLOOR OR UNDERGROUND (LONG DASHED PATTERN)

HALFTONING DOES NOT MODIFY SCOPE.

'TAG'-E — TAGS WITH DASH 'E' INDICATES THE REFERENCED OBJECT IS EXISTING

TAG-1 — UNDERLINED TAG INDICATES OBJECT IS IN-SCOPE. IF NEW, ADDITIONAL INFORMATION IS AVAILABLE IN A SCHEDULE, MATERIAL LIST, OR SYMBOL LIST

INDICATES AN EXISTING SYSTEM'S POINT OF CONNECTION/REMOVAL

APPLICABLE CODES

CONTRACTOR SHALL COMPLY WITH APPLICABLE CODES AND LOCAL AMENDMENTS INCLUDING, BUT NOT LIMITED TO, THE FOLLOWING:

ELECTRICAL CODE:	NEC 2020
ENERGY CONSERVATION CODE:	NCECC 2018

CONTRACTOR ABBREVIATION KEY

ABBR:	DESCRIPTION:
A.C.	ASBESTOS ABATEMENT CONTRACTOR
A.V.C.	AUDIO/VISUAL CONTRACTOR
C.C.	CIVIL CONTRACTOR
C.M.	CONSTRUCTION MANAGER
E.C.	ELECTRICAL CONTRACTOR
F.P.C.	FIRE PROTECTION CONTRACTOR
F.S.C.	FOOD SERVICE CONTRACTOR
G.C.	GENERAL CONTRACTOR
H.C.	HEATING CONTRACTOR
M.C.	MECHANICAL CONTRACTOR
N.C.C.	NURSE CALL CONTRACTOR
P.C.	PLUMBING CONTRACTOR
S.C.	SECURITY CONTRACTOR
T.C.	TECHNOLOGY CONTRACTOR
T.C.C.	TEMPERATURE CONTROLS CONTRACTOR
V.C.	VENTILATION CONTRACTOR

SYMBOL LIST - PIPE ACCESSORIES

SYMBOL	DESCRIPTION
	PIPE DOWN AND PIPE UP / UP AND DOWN
	REDUCER
	SHOCK ABSORBER
	SHUTOFF VALVE

SYMBOL LIST - PLUMBING SYSTEMS

SYMBOL	DESCRIPTION
CW	COLD WATER - POTABLE
HW	HOT WATER - POTABLE
SAN	SANITARY DRAINAGE

MECHANICAL RENOVATION NOTES:

THESE NOTES APPLY TO ALL MECHANICAL SHEETS AND TRADES, INCLUDING BUT NOT LIMITED TO, FIRE PROTECTION, PLUMBING, MEDICAL GAS, VENTILATION, PIPING AND TEMPERATURE CONTROL.

1. EXISTING CONDITIONS ARE SHOWN BASED ON INFORMATION OBTAINED FROM FIELD SURVEYS, EXISTING BUILDING DOCUMENTS, AND STAFF. VERIFY EXISTING CONDITIONS AND REPORT ANY CONFLICTS BEFORE PROCEEDING.
2. NOT ALL EXISTING DUCTWORK AND PIPING IS SHOWN. VERIFY EXISTING CONDITIONS BEFORE STARTING WORK. NOTIFY ENGINEER OF ANY CONFLICTS WITH NEW WORK.
3. FIELD VERIFY THE AVAILABLE CLEARANCES FOR DUCTWORK AND PIPING BEFORE FABRICATION. RISES AND DROPS MAY BE NECESSARY BECAUSE OF EXISTING FIELD CONDITIONS.
4. EACH CONTRACTOR SHALL FIELD VERIFY ACCESSIBILITY TO THE AREA OF THEIR WORK AND SHALL NOTIFY THE **GENERAL CONTRACTOR** PRIOR TO BIDDING IF OTHER UTILITIES ARE REQUIRED TO BE REMOVED OR RELOCATED TO ALLOW ACCESS TO THEIR AREA OF WORK.
5. THE GENERAL CONTRACTOR IS RESPONSIBLE FOR CUTTING, REMOVAL AND PATCHING OF ROOFS, WALLS, AND FLOORS ASSOCIATED WITH WORK BY ALL CONTRACTORS. CONTRACTORS SHALL NOTIFY THE GC OF AFFECTED AREAS PRIOR TO BIDDINGEACH CONTRACTOR SHALL CUT AND PATCH ROOFS, WALLS, AND FLOORS ASSOCIATED WITH THEIR WORK.
6. WHERE EXISTING MECHANICAL SYSTEMS DIFFER FROM THOSE SHOWN ON THE PROJECT DRAWINGS AND CREATE CONFLICTS WITH NEW EQUIPMENT, PIPING, OR DUCTWORK INSTALLATIONS, THE CONTRACTOR SHALL PROVIDE DETAILED DOCUMENTATION (SUCH AS SKETCHES, PHOTOS, AND DIMENSIONS) ALONG WITH RECOMMENDATIONS TO RESOLVE THE CONFLICT. THIS INFORMATION MUST BE SUBMITTED TO THE ENGINEER FOR REVIEW AND APPROVAL. NO WORK RELATED TO THE CONFLICT SHALL PROCEED UNTIL AN APPROVED RESOLUTION IS PROVIDED BY THE ENGINEER.
7. PROVIDE TEMPORARY CONNECTIONS TO MAINTAIN EXISTING SYSTEMS IN SERVICE DURING CONSTRUCTION. MAINTAIN ACCESS TO EXISTING MECHANICAL INSTALLATIONS THAT REMAIN ACTIVE.
8. OBTAIN PERMISSION FROM OWNER BEFORE SHUTTING DOWN ANY SYSTEM FOR ANY REASON. MAINTAIN SERVICE TO ALL COMPONENTS THAT ARE TO REMAIN UNTIL NEW SYSTEMS ARE INSTALLED.
9. MAINTAIN EXISTING SYSTEM IN SERVICE UNTIL NEW SYSTEM IS COMPLETE AND READY FOR TIE IN AND SWITCHOVER. DRAIN SYSTEM ONLY TO MAKE SWITCHOVERS AND CONNECTIONS. OBTAIN PERMISSION FROM OWNER BEFORE PARTIALLY OR COMPLETELY DRAINING SYSTEM. MAKE CHANGEOVER TO NEW SYSTEMS WITH MINIMUM OUTAGE.
10. DISCONNECT AND REMOVE MECHANICAL DEVICES AND EQUIPMENT SERVING EQUIPMENT THAT HAS BEEN REMOVED.
11. PROPERLY RECLAIM AND DISPOSE OF ALL REFRIGERANT IN REMOVED EQUIPMENT/ REFRIGERANT PIPING. RECLAIMED REFRIGERANT SHALL HAVE DOCUMENTATION AS REQUIRED BY THE AUTHORITY HAVING JURISDICTION (AHJ).

PLUMBING ROUGH-IN SCHEDULE

NOTES: (APPLIES TO ALL PLUMBING FIXTURES LISTED BELOW)
1) SIZES SHOWN ARE MINIMUMS. LARGER SIZES SHOWN ON THE DRAWING SHALL DICTATE THE ROUGH-IN SIZE. 2) SANITARY RISERS UP IN WALL TO FIXTURES SHALL BE A MINUMUM OF 2". 3) DOMESTIC WATER BRANCH PIPING OUTSIDE OF THE WALL/CHASE SHALL BE A MINIMUM OF 3/4" UNLESS NOTED OTHERWISE. ONLY THE FINAL RISE-DROP SHALL BE SMALLER. 4) FINAL SANITARY SIZE SHALL MATCH P-TRAP SIZE (REFER TO MATERIAL LIST).

TAG NAME	DESCRIPTION	CW	HW	SAN	VENT
EWC-1	ELECTRIC WATER COOLER	1/2"	-	1 1/2"	1 1/2"
FD-1	FLOOR DRAIN			3"	1 1/2"
IM-1	ICE MAKER BOX	1/2"	1/2"	-	-
L-1	LAVATORY	1/2"	1/2"	1 1/2"	1 1/2"
MB-1	MOP BASIN	1/2"	1/2"	2"	1 1/2"
RD-E	FLOOR DRAIN			3"	2"
SK-1	SINK	1/2"	1/2"	1 1/2"	1 1/2"
WC-1	WATER CLOSET	1"	-	4"	2"

PLUMBING SLOPE REQUIREMENTS:

BASED ON PLUMBING CODE: [CPC-2019][UPC-2018]

INTERIOR:	
SANITARY WASTE:	1/4" PER FOOT
GREASE WASTE:	1/4" PER FOOT
STORM (GRAVITY):	1/8" PER FOOT
CONDENSATE AND INDIRECT DRAINAGE:	1/8" PER FOOT
SANITARY AND GREASE VENT:	NO SPECIFIC PITCH, PITCH TO FIXTURES
DOMESTIC WATER:	NO SPECIFIC PITCH, PITCH TO FIXTURES

PLUMBING SLOPE REQUIREMENTS:

BASED ON PLUMBING CODE: [IPC-2018]

INTERIOR:	
SANITARY WASTE:	≤2-1/2"ø=1/4" PER FOOT ≥3"ø = 1/8" PER FOOT ≥8"ø = 1/16" PER FOOT
GREASE WASTE:	1/4" PER FOOT
STORM (GRAVITY):	1/8" PER FOOT
CONDENSATE AND INDIRECT DRAINAGE:	1/8" PER FOOT
SANITARY AND GREASE VENT:	NO SPECIFIC PITCH, PITCH TO FIXTURES
DOMESTIC WATER:	NO SPECIFIC PITCH, PITCH TO FIXTURES

PLUMBING SHEET INDEX

P000	PLUMBING COVERSHEET
P101	DEMOLITION PLAN - PLUMBING
P102	ROOF DEMOLITION PLAN - PLUMBING
P201	FLOOR PLAN - PLUMBING
P202	ROOF PLAN - PLUMBING
P300	PLUMBING DETAILS
P400	PLUMBING SCHEDULES
GRAND TOTAL: 7	

PLUMBING GENERAL NOTES:

1. THE SYMBOLS AND THE MATERIAL LIST ARE FOR THE CONVENIENCE OF THE CONTRACTOR. CONTRACTOR SHALL VERIFY QUANTITIES AND FURNISH ALL MATERIALS REQUIRED FOR FULLY OPERATIONAL SYSTEMS, WHETHER SPECIFIED OR NOT.
2. CATALOG NUMBERS SHALL NOT BE CONSIDERED COMPLETE, BUT ARE GIVEN AS AN AID TO THE CONTRACTOR AND TO INDICATE THE QUALITY REQUIRED. CONTRACTOR IS RESPONSIBLE FOR A COMPLETE DESCRIPTION OF MATERIAL ON THESE DRAWINGS AND IN THE SPECIFICATIONS BEFORE ORDERING. THE DESCRIPTION OF THE MATERIAL TAKES PRECEDENCE OVER THE CATALOG NUMBER. THE FIRST MANUFACTURER LISTED IS THE BASIS OF DESIGN.
3. CONTRACTOR SHALL VERIFY THAT FIXTURES SUPPLIED ARE APPROVED PER ALL APPLICABLE STATE, LOCAL AND GOVERNING AUTHORITIES.
4. ALL FIXTURES SHALL CONFORM TO FEDERAL ACT S.3874
5. INVERT ELEVATIONS ARE FROM EXISTING DRAWINGS AND MAY NOT BE ACCURATE. VERIFY ALL ELEVATIONS BEFORE BEGINNING WORK.
6. VERIFY UNDERGROUND PIPE SIZES, INVERT ELEVATIONS, AND LOCATIONS PRIOR TO BEGINNING ANY WORK.
7. REFER TO THE PLUMBING ROUGH-IN SCHEDULE FOR THE SIZES OF BRANCH PIPES TO PLUMBING FIXTURES.
8. EXISTING CONDITIONS ON DEMOLITION PLANS ARE PROVIDED TO INDICATE THE GENERAL SCOPE OF ITEMS TO BE REMOVED. REFER TO SPECIFICATION SECTION 22 05 05 FOR ADDITIONAL DEMOLITION INFORMATION.
9. P.C. SHALL CUT AND PATCH EXISTING AS REQUIRED FOR NEW OR DEMOLITION WORK UNLESS NOTED OTHERWISE. REFER TO SPECIFICATION SECTION 22 05 05 FOR ADDITIONAL INFORMATION.

MECHANICAL GENERAL NOTES:

THESE NOTES APPLY TO ALL MECHANICAL SHEETS AND TRADES, INCLUDING BUT NOT LIMITED TO, FIRE PROTECTION, PLUMBING, MEDICAL GAS, VENTILATION, PIPING AND TEMPERATURE CONTROL.

1. DRAWINGS SHOWING LOCATIONS OF EQUIPMENT, DUCTWORK, PIPING, ETC. ARE DIAGRAMMATIC AND MAY NOT ALWAYS REFLECT EXACT INSTALLATION CONDITIONS. DRAWINGS SHOW THE GENERAL ARRANGEMENT OF DUCTWORK, PIPING, EQUIPMENT, ETC., AND MAY NOT INCLUDE ALL OFFSETS AND FITTINGS REQUIRED FOR COMPLETE INSTALLATION. THE DRAWINGS SHALL BE FOLLOWED AS CLOSELY AS ACTUAL BUILDING CONSTRUCTION AND THE WORK OF OTHERS WILL PERMIT.
2. CATALOG AND MODEL NUMBERS SHALL NOT BE CONSIDERED COMPLETE, BUT ARE GIVEN AS AN AID TO THE CONTRACTOR AND TO INDICATE THE QUALITY REQUIRED. CONTRACTOR IS RESPONSIBLE FOR THE COMPLETE DESCRIPTION OF MATERIAL SCHEDULED ON THESE DRAWINGS AND IN THE SPECIFICATIONS BEFORE ORDERING. THE DESCRIPTION OF THE MATERIAL AND SCHEDULED PERFORMANCE TAKES PRECEDENCE OVER THE MODEL NUMBER. THE FIRST MANUFACTURER SCHEDULED IS THE BASIS OF DESIGN.
3. DETERMINATION OF QUANTITIES OF MATERIAL AND EQUIPMENT REQUIRED SHALL BE MADE BY THE CONTRACTOR FROM THE DOCUMENTS. WHERE MATERIAL AND/OR QUANTITY DISCREPANCIES ARISE BETWEEN DRAWINGS, SCHEDULES AND/OR SPECIFICATIONS, THE HIGHER QUALITY/ GREATER NUMBER SHALL GOVERN.
4. DO NOT SCALE DRAWINGS. VERIFY ALL DIMENSIONS AND CLEARANCES FROM ARCHITECTURAL, STRUCTURAL, SUBMITTALS, AND OTHER APPROPRIATE DRAWINGS OR PHYSICALLY AT SITE. REVIEW ALL DRAWINGS, INCLUDING THOSE OF OTHER TRADES.
5. COORDINATE ALL WORK WITH ALL OTHER TRADES PRIOR TO INSTALLATION TO PROVIDE CLEARANCES REQUIRED FOR OPERATION, MAINTENANCE, CODE COMPLIANCE, AND TO VERIFY NON-INTERFERENCE WITH OTHER WORK. DO NOT FABRICATE PRIOR TO VERIFICATION OF NECESSARY CLEARANCES FOR ALL TRADES. BRING ANY INTERFERENCES OR CONFLICTS TO THE ATTENTION OF THE ARCHITECT/ENGINEER BEFORE PROCEEDING WITH FABRICATION OR EQUIPMENT ORDERS.
6. REVIEW SPACE REQUIREMENTS OF EQUIPMENT SPECIFIED OR SUBSTITUTED AND MAKE REASONABLE ACCOMMODATIONS IN LAYOUT AND POSITIONING TO PROVIDE PROPER ACCESS.
7. ANY CHANGES REQUIRED TO ELIMINATE CONFLICTS OR THAT RESULT FROM A FAILURE TO COORDINATE SHALL BE MADE BY THE CONTRACTOR WITHOUT ADDITIONAL COST OR EXPENSE TO OTHERS.
8. EACH CONTRACTOR IS RESPONSIBLE FOR ALL COSTS ASSOCIATED WITH ELECTRICAL CHANGES REQUIRED FOR EQUIPMENT PROPOSED THAT DIFFERS FROM THE BASIS OF DESIGN.
9. REFER TO ARCHITECTURAL REFLECTED CEILING PLAN, ELECTRICAL, TECHNOLOGY AUDIO/VISUAL, AND OTHER MECHANICAL PLANS FOR EXACT LOCATIONS OF ALL CEILING MOUNTED DEVICES, OTHER THAN SPRINKLERS.
10. EACH CONTRACTOR IS RESPONSIBLE FOR DAMAGE CAUSED BY THEIR ACTIONS TO WALLS, FLOORS, CEILINGS, AND ROOFS. THE CONTRACTOR WHOSE WORK CAUSES DAMAGE IS RESPONSIBLE FOR PATCHING TO MATCH ORIGINAL CONSTRUCTION, FIRE RATING, AND FINISH.
11. IN AREAS WITH DRYWALL CEILINGS COORDINATE LOCATIONS OF ACCESS PANELS WITH THE GC FOR ACCESS TO VALVES, DUCTWORK ACCESSORIES, DAMPERS, ETC. COORDINATE PANEL TYPE AND COLOR WITH ARCHITECT. NOTIFY THE GC OF THE REQUIRED ACCESS PANELS PRIOR TO BIDDING.
12. SEAL ALL **FLOOR, WALL, AND ROOF** PENETRATIONS AIRTIGHT WHERE CONDUITS, PIPING, AND DUCTS PENETRATE. **PENETRATIONS THROUGH EXTERIOR WALLS AND ROOF SHALL BE SEALED AIRTIGHT WITH WATERPROOFING MATERIALS RECOMMENDED BY MANUFACTURER FOR OUTDOOR USE.**
13. CAULK ALL PIPE AND DUCT PENETRATIONS OF FULL HEIGHT NON-FIRE RATED WALL, PARTITION, FLOOR, AND ROOF ASSEMBLIES. THIS IS ESSENTIAL TO PREVENT NOISE TRANSMISSION FROM ONE ROOM TO ANOTHER AND TO PROVIDE THE DESIRED NC LEVELS WITHIN ROOMS.
14. WHERE PIPES AND DUCTS ARE SHOWN TO PENETRATE FLOORS, PROVIDE SLEEVED OPENINGS WITH THE TOP EDGE RAISED ABOVE FLOOR SURFACE IN ACCORDANCE WITH ALL RELEVANT SPEC SECTIONS. SEAL SLEEVE PERIMETER TO BE WATERTIGHT.
15. EQUIPMENT SIZES AND SERVICE CLEARANCE REQUIREMENTS VARY AMONG DIFFERENT MANUFACTURERS. CONSULT APPROVED SHOP DRAWINGS FOR EQUIPMENT SIZES AND REQUIRED SERVICE CLEARANCES. COORDINATE WITH LAYOUT OF EQUIPMENT PADS, PIPING, DUCTWORK, ETC.
16. DO NOT BLOCK TUBE PULL OR EQUIPMENT SERVICE CLEARANCES.
17. MAINTAIN A MINIMUM WORKING CLEARANCE OF 3'-6" IN FRONT OF ALL ELECTRICAL EQUIPMENT REQUIRING MAINTENANCE, INSPECTION, AND TESTING INCLUDING BUT NOT LIMITED TO PANELS, DISTRIBUTION PANELS, SWITCHBOARDS, MOTOR CONTROL CENTERS, TRANSFORMERS, EQUIPMENT DISCONNECTS AND STARTERS.
18. MAINTAIN THE DEDICATED ELECTRICAL EQUIPMENT SPACE DEFINED BY THE WIDTH / DEPTH OF ELECTRICAL EQUIPMENT MEASURED FROM THE FLOOR TO A HEIGHT 6'-0" ABOVE THE EQUIPMENT OR THE STRUCTURAL CEILING, WHICHEVER IS LOWER. SYSTEMS FOREIGN TO THE ELECTRICAL DISTRIBUTION SYSTEM ARE NOT ALLOWED IN THE DEDICATED ELECTRICAL SPACE INCLUDING: DUCTWORK, PIPING, ETC.
19. PROVIDE CONCRETE EQUIPMENT PADS FOR ALL FLOOR-MOUNTED EQUIPMENT. PADS SHALL EXTEND A MINIMUM OF 6 INCHES BEYOND ALL SIDES OF EQUIPMENT, UNLESS SUCH EXTENSION WOULD ENCROACH ON REQUIRED WORKING CLEARANCES AT CONTROL PANELS OR ELECTRICAL EQUIPMENT. PROVIDE 1/2-INCH CHAMFER (45-DEGREE) OR 1/2-INCH RADIUS AT ALL HORIZONTAL EDGES.
20. DO NOT EXCEED 25 LBS PER HANGER AND A MINIMUM SPACING OF 2'-0" ON CENTER WHEN ATTACHING TO METAL ROOF DECKING (LIMITATION NOT REQUIRED WITH CONCRETE ON METAL DECK). THIS 25 LBS. LOAD AND 2'-0" SPACING INCLUDE ADJACENT ELECTRICAL AND ARCHITECTURAL ITEMS HANGING FROM DECK. IF THE HANGER RESTRICTIONS CANNOT BE ACHIEVED, SUPPLEMENTAL FRAMING OFF STEEL FRAMING SHALL BE ADDED. ANCHORS EMBEDDED IN CONCRETE SHALL BE CRACKED CONCRETE APPROVED IN ACCORDANCE WITH SPECIFICATIONS.

IMEG
3221 BLUE RIDGE ROAD
SUITE 113
RALEIGH, NC 27612
P: 919.571.1111
www.imegcorp.com

IMEG RESERVES PROPRIETARY RIGHTS, INCLUDING COPYRIGHTS, TO THIS DRAWING AND THE DATA SHOWN THEREON. SAID DRAWING AND/OR DATA ARE THE EXCLUSIVE PROPERTY OF IMEG AND SHALL NOT BE USED OR REPRODUCED FOR ANY OTHER PROJECT WITHOUT THE EXPRESS WRITTEN APPROVAL AND PARTICIPATION OF IMEG.
©2026 IMEG CONSULTANTS CORP.

North Carolina Design Registration #F-1507

0 1 2 3
REF. SCALE IN INCHES — PROJECT #26001727.00

OAKLEY COLLIER ARCHITECTS
OCA
109 Candlewood Road, Rocky Mount, NC 27804 (P) 252.937.2500
205 W. Martin Street, Raleigh, NC 27601

RENOVATION FOR:
CRAVEN COUNTY GOVERNMENT CENTER EAST
CRAVEN COUNTY
1208 E. MAIN STREET, HAVELOCK, NORTH CAROLINA 28532

NORTH CAROLINA PROFESSIONAL CORPORATION IMEG CORPORATION No. F-1507

5/29/26
NORTH CAROLINA PROFESSIONAL SEAL 051195 ENGINEER PATRICK R. DRUMMOND

GENERAL NOTE:
Prior to construction start. Contractor shall verify & be responsible for all Dimensions.

Revisions

#	Description	Date

Date	Project No.
05-28-26	26001727.00
Drawn By: FEA	Sheet No. P000
Checked By: DRD	

Sheet Title
PLUMBING COVERSHEET

Copyright © 2025 Oakley Collier Architects. These drawings are of the property of the Architect for use under his supervision. No reproduction or other use is allowed without permission.

KEYNOTES: #

1. REMOVE PLUMBING FIXTURE, APPURTENANCES, AND RELATED WATER PIPING. CAP WASTE AND VENT PIPING AS REQUIRED.
2. EXISTING WATER LINE TO BE REPLACED INSIDE AND OUTSIDE BUILDING, INCLUDING WATER HEATER AND APPURTENANCES. SEE SIT PLAN FOR WATER METER REPLACEMENT.
3. EXISTING 4" SANITARY SEWER LINE TO REMAIN.

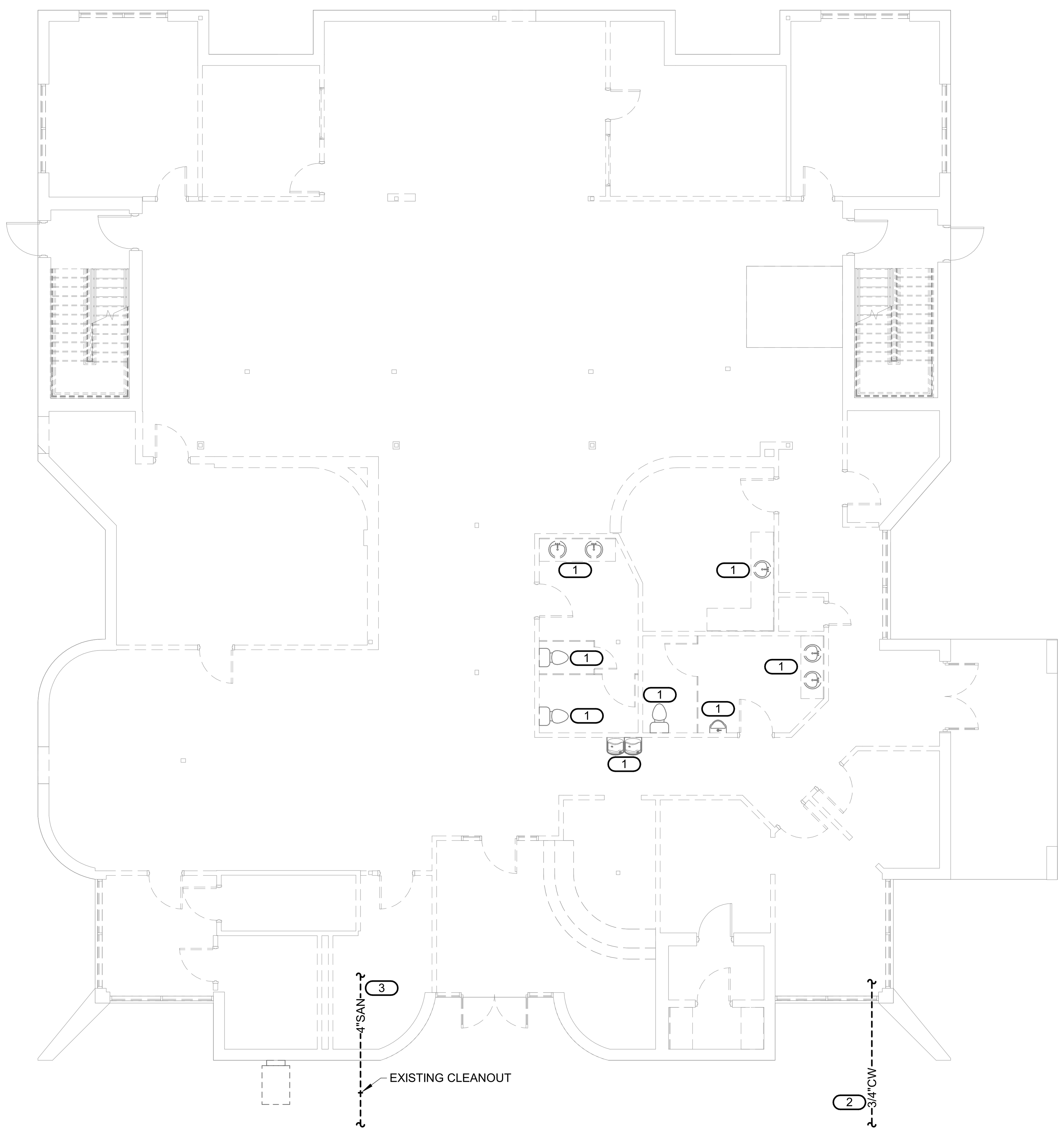

1 FIRST FLOOR DEMOLITION PLAN - PLUMBING

1/8" = 1'-0"

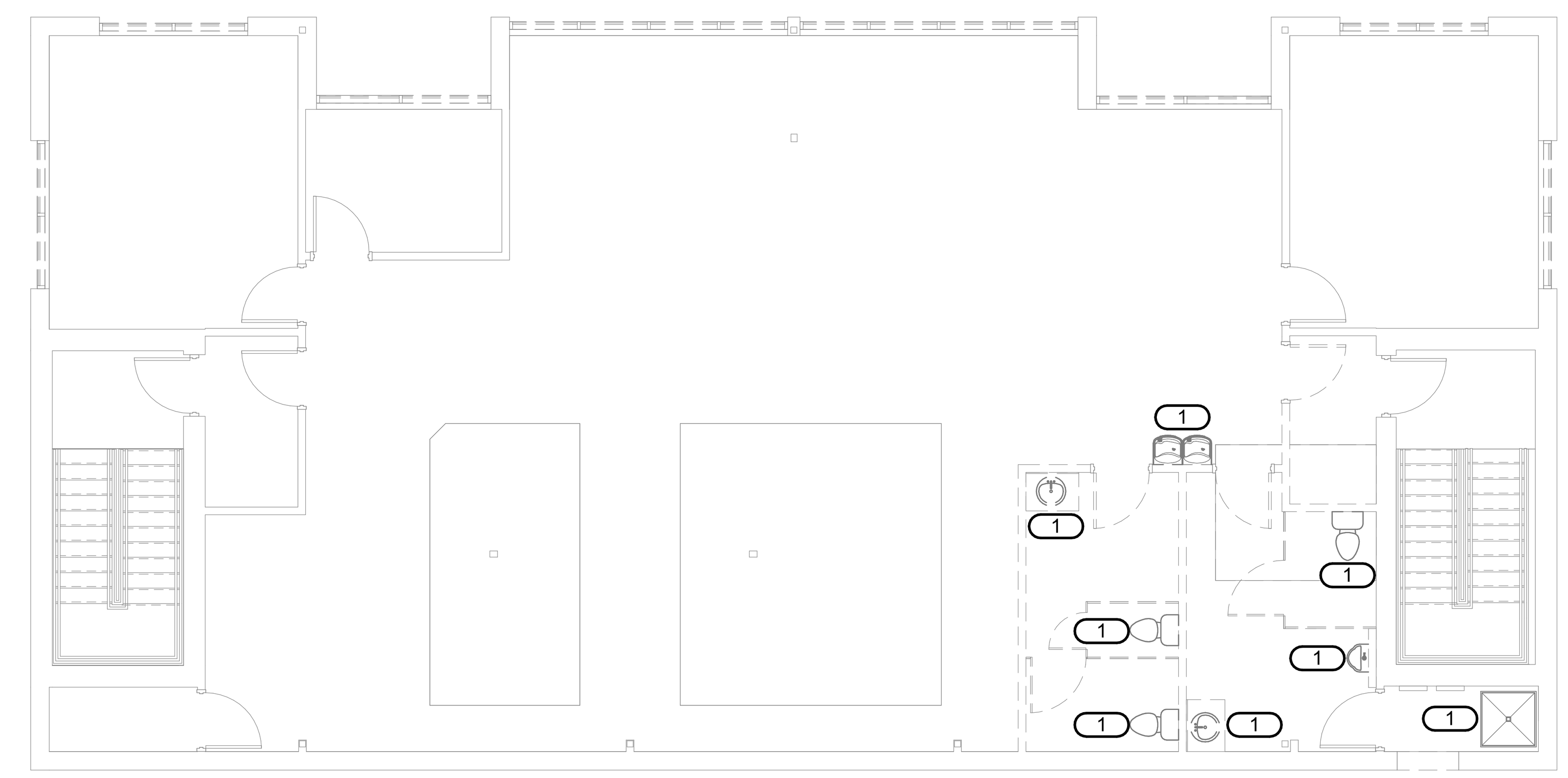

NORTH

2 SECOND FLOOR DEMOLITION PLAN - PLUMBING

1/8" = 1'-0"

OAKLEY COLLIER ARCHITECTS

OCA

109 Candlewood Road, Rocky Mount, NC 27804 (P) 252.937.2500
205 W. Martin Street, Raleigh, NC 27601

RENOVATION FOR:

CRAVEN COUNTY GOVERNMENT CENTER EAST

CRAVEN COUNTY
1208 E. MAIN STREET, HAVELOCK, NORTH CAROLINA 28532

NORTH CAROLINA PROFESSIONAL CORPORATION IMEG CORPORATION No. F-1507

NORTH CAROLINA PROFESSIONAL SEAL 051195 ENGINEER PATRICK MCCABE

5/28/26

Patrick McCabe

GENERAL NOTE:
Prior to construction start. Contractor shall verify & be responsible for all Dimensions.

Revisions

#	Description	Date

Date	Project No.
05-28-26	26001727.00
Drawn By: FEA	Sheet No.
Checked By: DRD	P101

Sheet Title
DEMOLITION PLAN - PLUMBING

IMEG
3221 BLUE RIDGE ROAD
SUITE 113
RALEIGH, NC 27612
P: 919.571.1111
www.imegcorp.com

IMEG RESERVES PROPRIETARY RIGHTS, INCLUDING COPYRIGHTS, TO THIS DRAWING AND THE DATA SHOWN THEREON. SAID DRAWING AND/OR DATA ARE THE EXCLUSIVE PROPERTY OF IMEG AND SHALL NOT BE USED OR REPRODUCED FOR ANY OTHER PROJECT WITHOUT THE EXPRESS WRITTEN APPROVAL AND PARTICIPATION OF IMEG.
©2026 IMEG CONSULTANTS CORP.

North Carolina Design Registration #F-1507

0 1 2 3
REF. SCALE IN INCHES
PROJECT #26001727.00

Copyright © 2025 Oakley Collier Architects. These drawings are of the property of the Architect for use under his supervision. No reproduction or other use is allowed without permission.

KEYNOTES: (#)

1. EXISTING ROOF DRAINS AND ROOF DRAIN LEADER LINES TO REMAIN. PLUMBING CONTRACTOR TO FIELD VERIFY EXACT LOCATIONS.

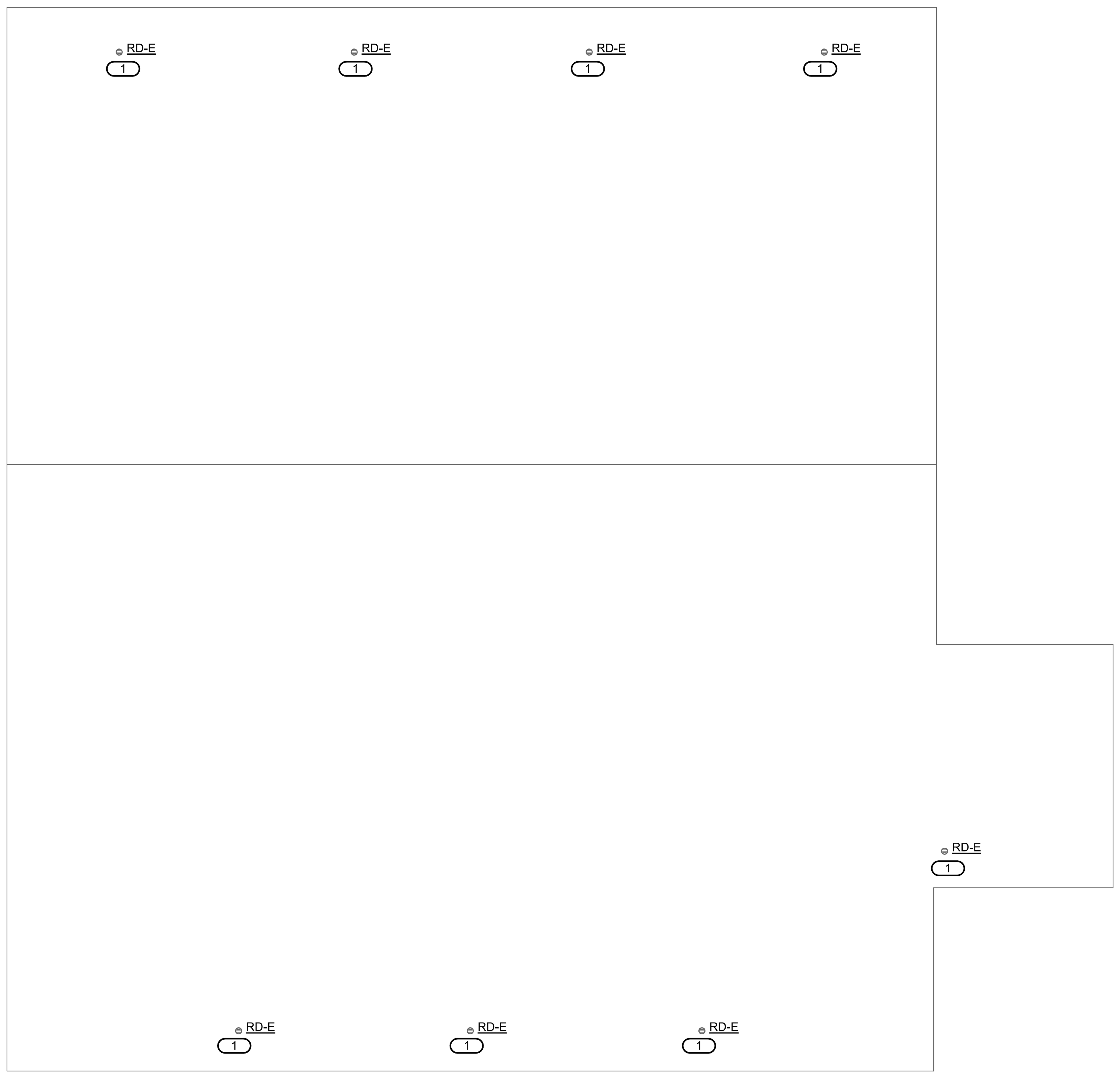

1 ROOF DEMOLITION PLAN - PLUMBING

1/8" = 1'-0"

OAKLEY COLLIER ARCHITECTS
OCA
109 Candlewood Road, Rocky Mount, NC 27804 (P) 252.937.2500
205 W. Martin Street, Raleigh, NC 27601

RENOVATION FOR:
CRAVEN COUNTY GOVERNMENT CENTER EAST
CRAVEN COUNTY
1208 E. MAIN STREET, HAVELOCK, NORTH CAROLINA 28532

NORTH CAROLINA PROFESSIONAL CORPORATION IMEG CORPORATION No. F-1507

5/28/26
NORTH CAROLINA PROFESSIONAL SEAL 051195 ENGINEER PATRICK MCCABE

GENERAL NOTE:
Prior to construction start. Contractor shall verify & be responsible for all Dimensions.

Revisions

#	Description	Date

IMEG
3221 BLUE RIDGE ROAD
SUITE 113
RALEIGH, NC 27612
P: 919.571.1111
www.imegcorp.com

IMEG RESERVES PROPRIETARY RIGHTS, INCLUDING COPYRIGHTS, TO THIS DRAWING AND THE DATA SHOWN THEREON. SAID DRAWING AND/OR DATA ARE THE EXCLUSIVE PROPERTY OF IMEG AND SHALL NOT BE USED OR REPRODUCED FOR ANY OTHER PROJECT WITHOUT THE EXPRESS WRITTEN APPROVAL AND PARTICIPATION OF IMEG.
©2026 IMEG CONSULTANTS CORP.
North Carolina Design Registration #F-1507

0 1 2 3
REF. SCALE IN INCHES
PROJECT #26001727.00

Date	Project No.
05-28-26	26001727.00
Drawn By: FEA	Sheet No.
Checked By: DRD	P102

Sheet Title
ROOF DEMOLITION PLAN - PLUMBING

Copyright © 2025 Oakley Collier Architects. These drawings are of the property of the Architect for use under his supervision. No reproduction or other use is allowed without permission.

KEYNOTES: (#)

1. REPLACE BUILDINGS EXISTING COLD WATER PIPING WITH NEW 2" WATER LINE. PLUMBING CONTRACTORS WORK BEGINS 5'-0" OUTSIDE BUILDING. SEE SITE PLAN FOR CONTINUATION.
2. EXISTING SANITARY SEWER PIPE TO REMAIN PLUMBING CONTRACTOR TO SCOPE BUILDINGS EXISTING LINE AND REPAIR PIPING LEAKS OR DAMAGE AS REQUIRED.
3. NEW 2" WATER LINE TO RISE UP FROM BELOW FINISHED FLOOR TO BACKFLOW PREVENTER (BP-1). PROVIDE WITH BUILDING SHUT OFF VALVE.
4. NEW WATER PIPING LOCATED ABOVE FINISHED CEILING. COORDINATE LOCATION WITH MECHANICAL AND ELECTRICAL CONTRACTORS.
5. 1 1/2" COLD WATER LINE UP TO SECOND FLOOR.
6. 1" HOT WATER LINE UP TO SECOND FLOOR.
7. 1" HOT WATER LINE DOWN FROM SECOND FLOOR.
8. CONNECT TO EXISTING WASTE AND VENT PIPING IN THIS AREA, FIELD VERIFY EXACT LOCATION. CAP UNUSED WASTE AND VENT PIPING AS REQUIRED.
9. SUMP PUMP (SP-1) LOCATED IN SUMP PIT, SUMP PIT BY GENERAL CONTRACTOR.
10. ROUTE 2" FORCED MAIN ABOVE FINISHED CEILING, COORDINATE LOCATION WITH MECHANICAL AND ELECTRICAL CONTRACTORS.
11. DROP DOWN IN WALL AND SPILL ON GRADE, PROVIDE WITH SPLASH BLOCK.
12. ELEVATOR SUMP PUMP ALARM ON WALL.
13. 1-HR RATED FIRE WALL.

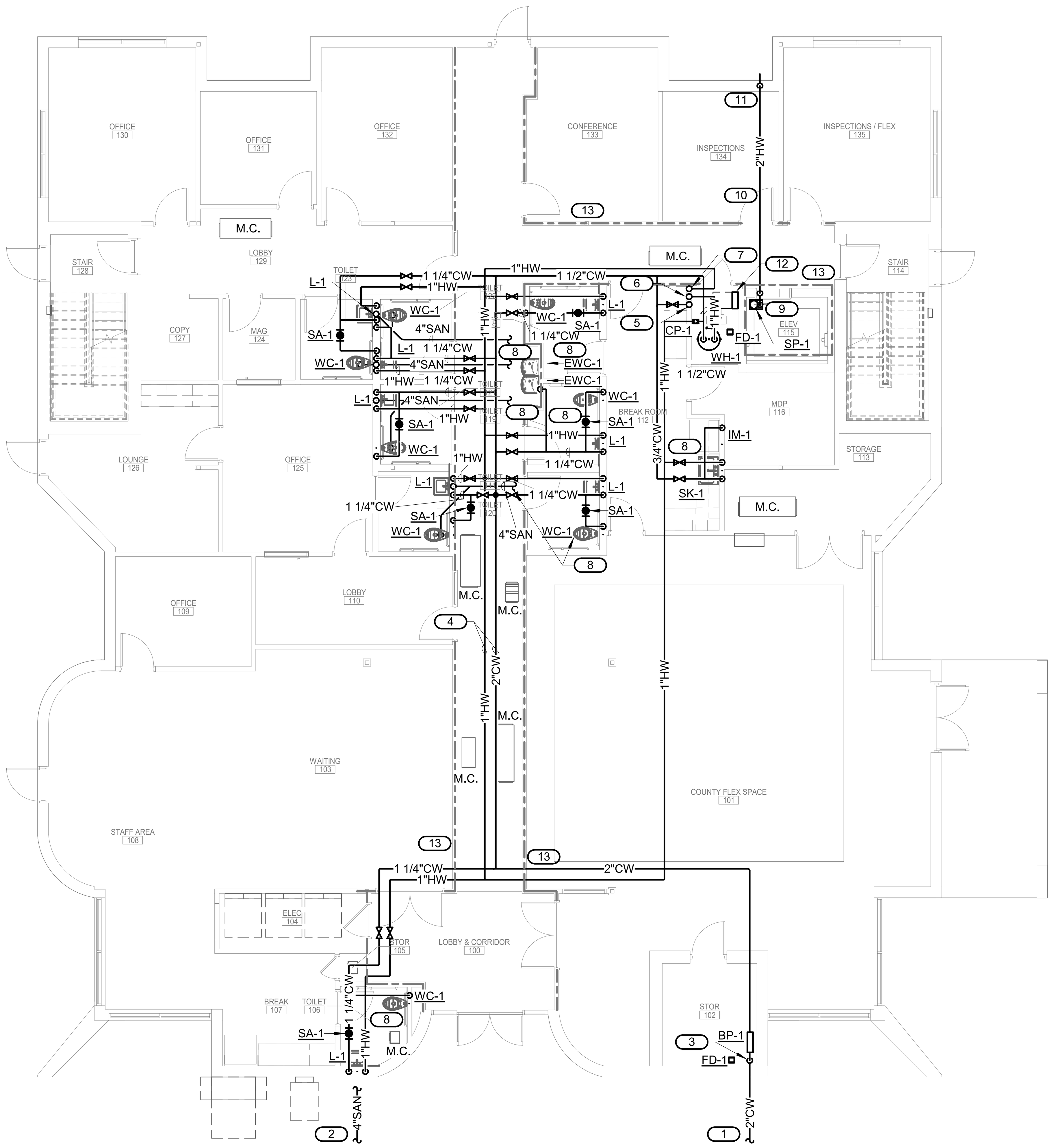

1 FIRST FLOOR PLAN - PLUMBING

1/8" = 1'-0"

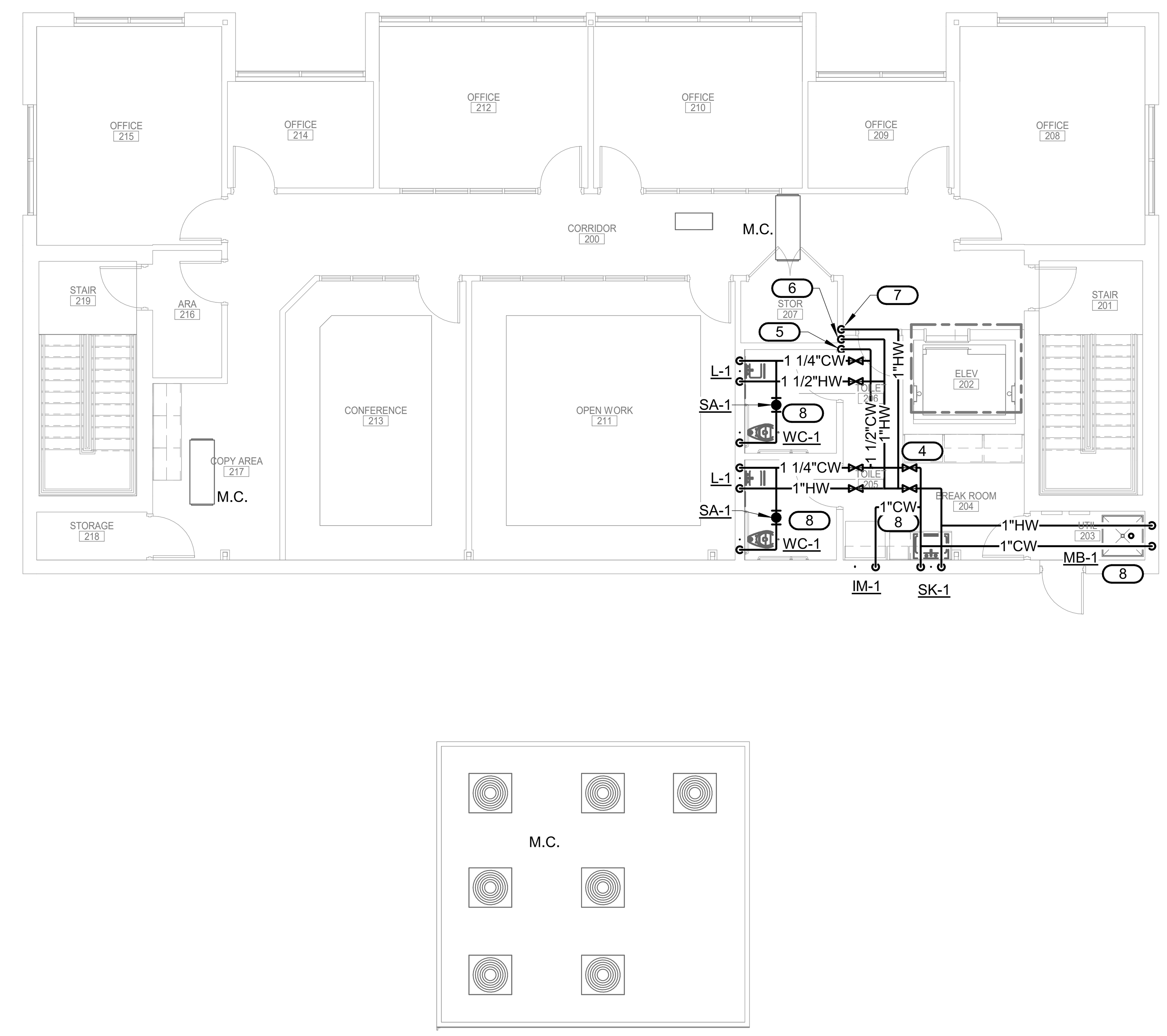

NORTH

2 SECOND FLOOR PLAN - PLUMBING

1/8" = 1'-0"

IMEG

3221 BLUE RIDGE ROAD
SUITE 113
RALEIGH, NC 27612
P: 919.571.1111

www.imegcorp.com

IMEG RESERVES PROPRIETARY RIGHTS, INCLUDING COPYRIGHTS, TO THIS DRAWING AND THE DATA SHOWN THEREON. SAID DRAWING AND/OR DATA ARE THE EXCLUSIVE PROPERTY OF IMEG AND SHALL NOT BE USED OR REPRODUCED FOR ANY OTHER PROJECT WITHOUT THE EXPRESS WRITTEN APPROVAL AND PARTICIPATION OF IMEG.
©2026 IMEG CONSULTANTS CORP.

North Carolina Design Registration #F-1507

REF. SCALE IN INCHES 0 1 2 3

PROJECT #26001727.00

OAKLEY COLLIER ARCHITECTS
OCA
109 Candlewood Road, Rocky Mount, NC 27804 (P) 252.937.2500
205 W. Martin Street, Raleigh, NC 27601

RENOVATION FOR:

CRAVEN COUNTY GOVERNMENT CENTER EAST

CRAVEN COUNTY
1208 E. MAIN STREET, HAVELOCK, NORTH CAROLINA 28532

NORTH CAROLINA PROFESSIONAL CORPORATION IMEG CORPORATION No. F-1507

5/28/26
NORTH CAROLINA PROFESSIONAL SEAL 051195 ENGINEER PATRICK M. COBE

GENERAL NOTE:
Prior to construction start, Contractor shall verify & be responsible for all Dimensions.

Revisions #	Description	Date

Date	Project No.
05-28-26	26001727.00
Drawn By FEA	Sheet No.
Checked By DRD	P201

Sheet Title
FLOOR PLAN - PLUMBING

Copyright © 2025 Oakley Collier Architects. These drawings are of the property of the Architect for use under his supervision. No reproduction or other use is allowed without permission.

KEYNOTES: (#)

1. EXISTING ROOF DRAINS AND ROOF DRAIN LEADER LINES TO REMAIN. PLUMBING CONTRACTOR TO CLEAN AND REFURBISH ROOF DRAINS TO LIKE NEW CONDITION AND FIELD VERIFY CONDITION OF ROOF DRAIN LEADERS AND MAKE REPAIRS AS REQUIRED.

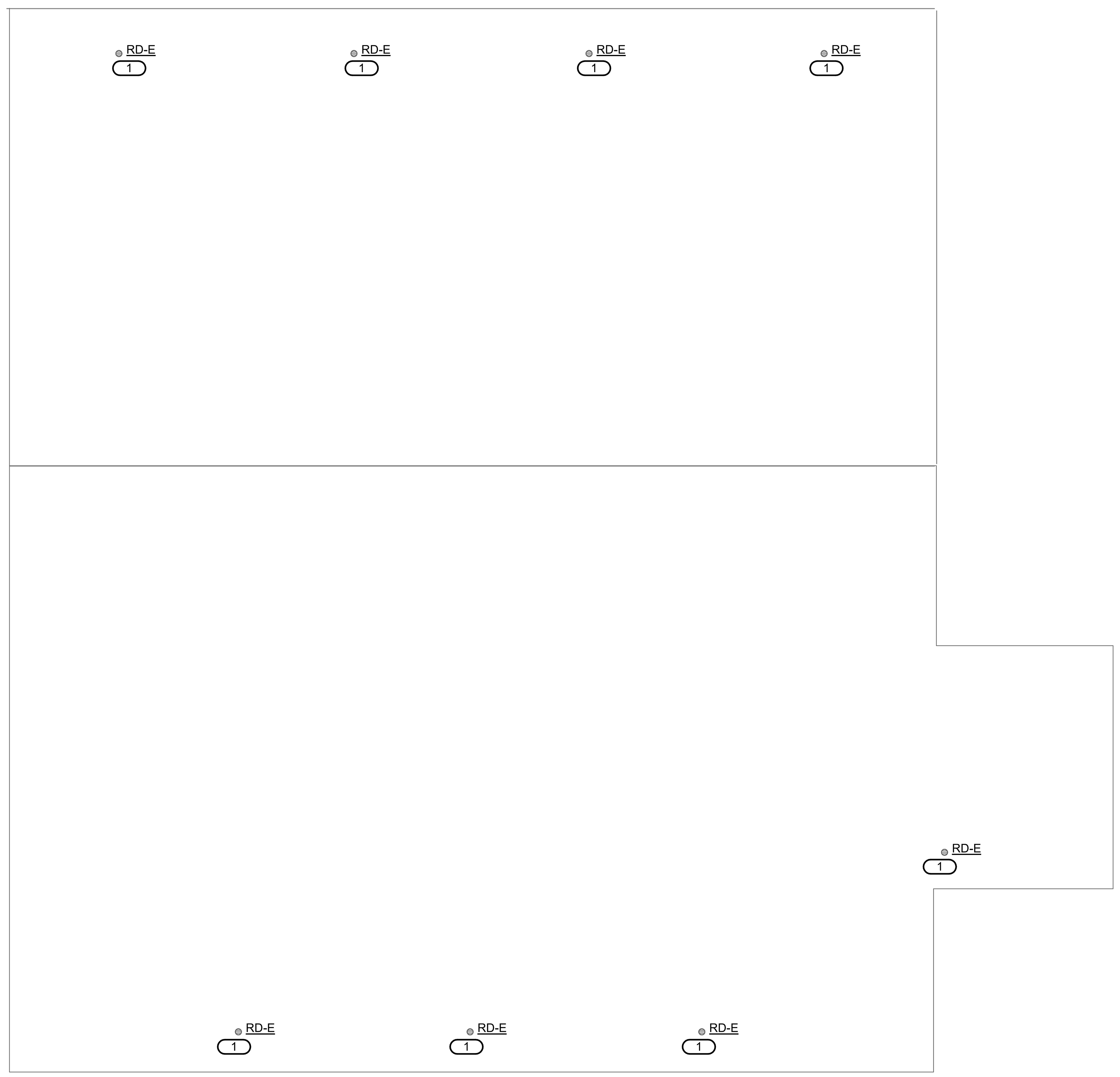

1 ROOF PLAN - PLUMBING

1/8" = 1'-0"

Copyright © 2025 Oakley Collier Architects. These drawings are of the property of the Architect for use under his supervision. No reproduction or other use is allowed without permission.

OAKLEY COLLIER ARCHITECTS
OCA
109 Candlewood Road, Rocky Mount, NC 27804 (P) 252.937.2500
205 W. Martin Street, Raleigh, NC 27601

RENOVATION FOR:
CRAVEN COUNTY GOVERNMENT CENTER EAST
CRAVEN COUNTY
1208 E. MAIN STREET, HAVELOCK, NORTH CAROLINA 28532

NORTH CAROLINA PROFESSIONAL CORPORATION IMEG CORPORATION No. F-1507

5/28/26
NORTH CAROLINA PROFESSIONAL ENGINEER SEAL 051195 PATRICK MCCABE
Patrick McCabe

GENERAL NOTE:
Prior to construction start, Contractor shall verify & be responsible for all Dimensions.

Revisions

#	Description	Date

IMEG
3221 BLUE RIDGE ROAD
SUITE 113
RALEIGH, NC 27612
P: 919.571.1111
www.imegcorp.com

IMEG RESERVES PROPRIETARY RIGHTS, INCLUDING COPYRIGHTS, TO THIS DRAWING AND THE DATA SHOWN THEREON. SAID DRAWING AND/OR DATA ARE THE EXCLUSIVE PROPERTY OF IMEG AND SHALL NOT BE USED OR REPRODUCED FOR ANY OTHER PROJECT WITHOUT THE EXPRESS WRITTEN APPROVAL AND PARTICIPATION OF IMEG.
©2026 IMEG CONSULTANTS CORP.
North Carolina Design Registration #F-1507

0 1 2 3
REF. SCALE IN INCHES
PROJECT #26001727.00

Date	Project No.
05-28-26	26001727.00
Drawn By: FEA	Sheet No.
Checked By: DRD	P202

Sheet Title
ROOF PLAN - PLUMBING

SYSTEM NO. CAJ2117

F RATING - 3 HOUR
T RATING - 2 HOUR
L RATING AT AMBIENT - 7 CFM/SQ FT
L RATING AT 400 F - 1 CFM/SQ FT

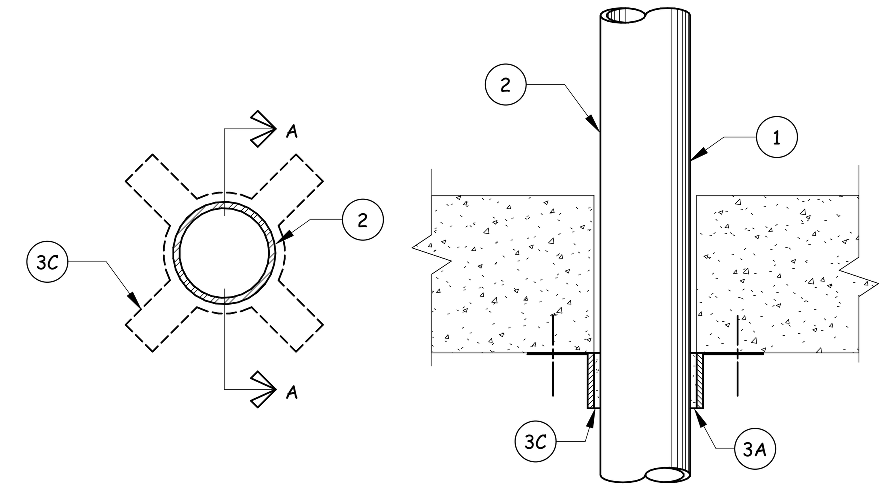

SECTION A - A

(1) FLOOR OR WALL ASSEMBLY-LIGHTWEIGHT OR NORMAL WEIGHT (100-150 PCF) CONCRETE. MIN THICKNESS OF SOLID CONCRETE FLOOR OR WALL ASSEMBLY IS 4-1/2 IN. WALL MAY ALSO BE CONSTRUCTED OF ANY UL CLASSIFIED CONCRETE BLOCKS*. DIAM OF OPENING TO BE MAX 1/2 IN. LARGER THAN DIAM OF NONMETALLIC PIPE (ITEM 2). MAX DIAM OF OPENING IS 5 IN.
SEE CONCRETE BLOCKS (CAZT) CATEGORY IN FIRE RESISTANCE DIRECTORY FOR NAMES OF MANUFACTURERS.

(2) NONMETALLIC PIPE-NOM 4 IN. DIAM (OR SMALLER) SCHEDULE 40 SOLID-CORE POLYVINYL CHLORIDE (PVC) PIPE OR SDR17 CHLORINATED POLYVINYL CHLORIDE (CPVC) PIPE FOR USE IN CLOSED (PROCESS OR SUPPLY) OR VENTED (DRAIN, WASTE OR VENT) PIPING SYSTEMS. A MAX OF ONE NONMETALLIC PIPE IS PERMITTED IN THE FIRESTOP SYSTEM. THE PIPE SHALL BE CENTERED IN THE THROUGH OPENING. PIPE TO BE RIGIDLY SUPPORTED ON BOTH SIDES OF WALL OR FLOOR ASSEMBLY.

(3) FIRESTOP SYSTEM-THE DETAILS OF THE FIRESTOP SYSTEM SHALL BE AS FOLLOWS:
A. FILL, VOID OR CAVITY MATERIALS*—WRAP STRIP—NOM 1/4 IN. THICK INTUMESCENT ELASTOMERIC MATERIAL FACED ON ONE SIDE WITH ALUMINUM FOIL, SUPPLIED IN 2 IN. WIDE STRIPS. NOM 2 IN. WIDE STRIPS TIGHTLY WRAPPED AROUND NONMETALLIC PIPE (FOIL SIDE EXPOSED) WITH THE TOP EDGES BUTTED AGAINST THE UNDERSIDE OF THE CONCRETE FLOOR. SUFFICIENT LAYERS OF WRAP STRIP SHALL BE INSTALLED TO LAP A MIN OF 3/16 IN. ON THE CONCRETE AROUND THE ENTIRE PERIMETER OF THE THROUGH OPENING. FOR NOM 1/2 IN. TO NOM 1-1/2 IN. DIAM PIPES, A MIN OF ONE LAYER OF WRAP STRIP IS REQUIRED. FOR NOM 2, 2-1/2 IN. AND 3 IN. DIAM PIPES, A MIN OF TWO LAYERS OF WRAP STRIP IS REQUIRED. FOR NOM 3-1/2 IN. AND 4 IN. DIAM PIPES, A MIN OF THREE LAYERS OF WRAP STRIP IS REQUIRED. EACH LAYER OF WRAP STRIP TO BE INSTALLED WITH BUTTED SEAM WITH BUTTED SEAMS IN SUCCESSIVE LAYERS STAGGERED. WRAP STRIP LAYERS TEMPORARILY HELD IN POSITION USING ALUMINUM FOIL TAPE, STEEL WIRE TIE, OR EQUIVALENT. IN WALL ASSEMBLIES, THE WRAP STRIP IS TO BE INSTALLED IN THE SAME MANNER USED FOR FLOOR ASSEMBLIES, BUT IT SHALL BE INSTALLED SYMMETRICALLY ON BOTH SIDES OF THE WALL ASSEMBLY.
MINNESOTA MINING & MFG. CO.—FS-195+
B. FILL, VOID OR CAVITY MATERIALS*-CAULK OR PUTTY-(NOT SHOWN)- GENEROUS BEAD OF CAULK OR PUTTY TO BE APPLIED TO OUTER PERIMETER OF WRAP STRIP AT ITS INTERFACE WITH FLOOR OR WALL SURFACES(S).
MINNESOTA MINING & MFG. CO.—CP 25WB+ CAULK, TYPE MP+ PUTTY
(NOTE: L RATINGS APPLY ONLY WHEN TYPE CP 25WB+ CAULK IS USED.)
C. STEEL COLLAR-NOM 2 IN. DEEP COLLAR WITH 1-1/4 IN. WIDE BY 2 IN. LONG ANCHOR TABS AND MIN 1/2 IN. LONG TABS TO RETAIN WRAP STRIP LAYERS. COILS OF PRECUT 0.016 IN. THICK (30 GAUGE) GALV SHEET STEEL AVAILABLE FROM WRAP STRIP MANUFACTURER. AS AN ALTERNATE, COLLAR MAY BE FIELD-FABRICATED FROM MIN 0.016 IN. THICK (30 GAUGE) GALV SHEET STEEL IN ACCORDANCE WITH INSTRUCTION SHEET SUPPLIED BY WRAP STRIP MANUFACTURER. STEEL COLLAR, WITH ANCHOR TABS BENT OUTWARD 90 DEG, WRAPPED TIGHTLY AROUND WRAP STRIP LAYERS WITH MIN 1 IN. OVERLAP AT SEAM. WITH STEEL COLLAR ANCHOR TABS PRESSED TIGHTLY AGAINST FLOOR OR WALL SURFACE(S), COMPRESS COLLAR AROUND WRAP STRIP LAYERS USING A MIN 1/2 IN. WIDE BY 0.028 IN. THICK STAINLESS STEEL BAND CLAMP WITH WORM DRIVE TIGHTENING MECHANISM AT THE COLLAR MIDHEIGHT. SECURE COLLAR TO FLOOR OR WALL SURFACE(S) WITH 1/4 IN. DIAM BY MIN 1-1/2 IN. LONG STEEL EXPANSION BOLTS, OR EQUIVALENT, IN CONJUNCTION WITH STEEL NUTS AND MIN 1-1/4 IN. DIAM STEEL FENDER WASHERS. TWO ANCHOR BOLTS, SYMMETRICALLY LOCATED, ARE REQUIRED FOR NOM 1/2 IN. TO NOM 2 IN. DIAM PIPES. THREE ANCHOR BOLTS, SYMMETRICALLY LOCATED, ARE REQUIRED FOR NOM 3 IN. DIAM PIPES. FOUR ANCHOR BOLTS, SYMMETRICALLY LOCATED, ARE REQUIRED FOR NOM 3-1/2 AND 4 IN. DIAM PIPES. AS A FINAL STEP, BEND RETAINER TABS 90 DEG TOWARD PIPE TO LOCK WRAP STRIP LAYERS IN POSITION.
D. FIRESTOP DEVICE*-(NOT SHOWN)-AS AN ALTERNATE TO ITEMS A AND C WHEN NOM 1-1/2, 2, 3 OR 4 IN. DIAM NONMETALLIC PIPE IS USED, A FIRESTOP DEVICE CONSISTING OF A SHEET-STEEL SPLIT COLLAR LINED WITH INTUMESCENT MATERIAL AND PROVIDED WITH STEEL CLIPS FOR ATTACHMENT MAY BE USED. FIRESTOP DEVICE TO BE INSTALLED ON UNDERSIDE OF FLOOR OR ON BOTH SIDES OF WALL IN ACCORDANCE WITH THE ACCOMPANYING INSTALLATION INSTRUCTIONS.
MINNESOTA MINING & MFG. CO.—TYPES PPD 150, PPD 200, PPD 300, PPD 400.
*BEARING THE UL CLASSIFICATION MARKING

5 PENETRATION DETAIL

12" = 1'-0"

SYSTEM NO. WL5001

F RATING - 1 AND 2 HOUR
T RATING - 3/4, 1 AND 1 1/2 HR
L RATING AT AMBIENT - 2 CFM/SQ FT
L RATING AT 400 F - LESS THAN 1 CFM/SQ FT

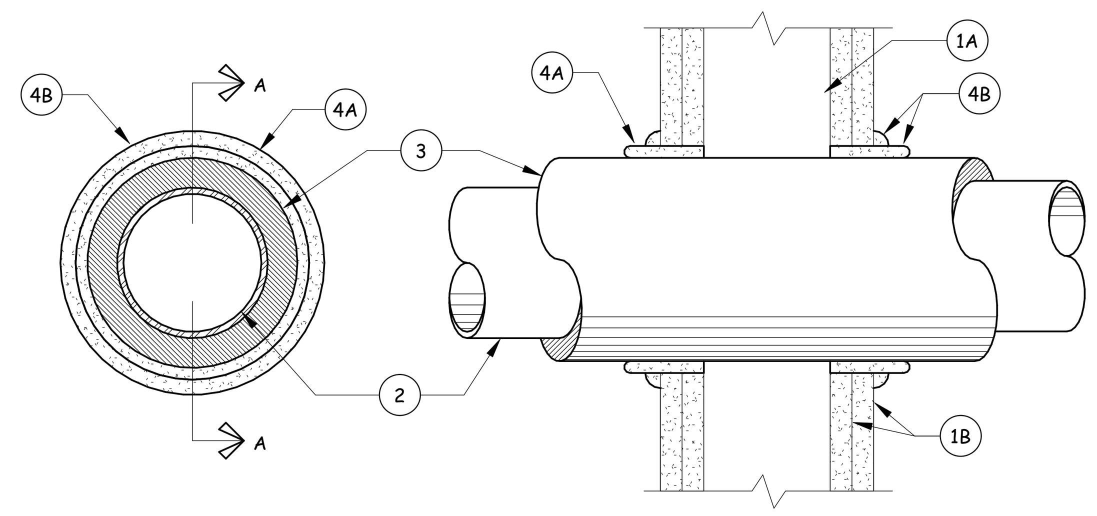

SECTION A - A

(1) WALL ASSEMBLY-THE 1 OR 2 HR FIRE-RATED GYPSUM WALLBOARD/STUD WALL ASSEMBLY SHALL BE CONSTRUCTED OF THE MATERIALS AND IN THE MANNER DESCRIBED IN THE INDIVIDUAL U300 OR U400 SERIES WALL OR PARTITION DESIGN IN THE UL FIRE RESISTANCE DIRECTORY AND SHALL INCLUDE THE FOLLOWING CONSTRUCTION FEATURES:
A. STUDS-WALL FRAMING MAY CONSIST OF EITHER WOOD STUDS OR STEEL CHANNEL STUDS. WOOD STUDS TO CONSIST OF NOM 2 BY 4 IN. LUMBER SPACED 16 IN. OC WITH NOM 2 BY 4 IN. LUMBER END PLATES AND CROSS BRACES. STEEL STUDS TO BE MIN 3-5/8 IN. WIDE BY 1-3/8 IN. DEEP CHANNELS SPACED MAX 24 IN. OC.
B. WALLBOARD, GYPSUM*-NOM 5/8 IN. THICK, 4 FT WIDE WITH SQUARE OR TAPERED EDGES. THE GYPSUM WALLBOARD TYPE, THICKNESS, NUMBER OF LAYERS, FASTENER TYPE AND SHEET ORIENTATION SHALL BE AS SPECIFIED IN THE INDIVIDUAL U300 OR U400 SERIES DESIGN IN THE UL FIRE RESISTANCE DIRECTORY. MAX DIAM OF OPENING IS 14-1/2 IN FOR WOOD STUD WALLS AND 18 IN. FOR STEEL STUD WALLS.
THE HOURLY F RATING OF THE FIRESTOP SYSTEM IS 1 HR WHEN INSTALLED IN A 1 HR FIRE RATED WALL AND 2 HR WHEN INSTALLED IN A 2 HR FIRE RATED WALL.

(2) THROUGH PENETRANTS-ONE METALLIC PIPE OR TUBING TO BE CENTERED WITHIN THE FIRESTOP SYSTEM. PIPE OR TUBING TO BE RIGIDLY SUPPORTED ON BOTH SIDES OF WALL ASSEMBLY. THE FOLLOWING TYPES AND SIZES OF METALLIC PIPES OR TUBING MAY BE USED:
A. STEEL PIPE-NOM 12 IN. DIAM (OR SMALLER) SCHEDULE 10 (OR HEAVIER) STEEL PIPE.
B. COPPER TUBING-NOM 6 IN. DIAM (OR SMALLER) TYPE L (OR HEAVIER) COPPER TUBING.
C. COPPER PIPE-NOM 6 IN. DIAM (OR SMALLER) REGULAR (OR HEAVIER) COPPER PIPE.

(3) PIPE COVERING*-NOM 1 OR 2 IN. THICK HOLLOW CYLINDRICAL HEAVY DENSITY (MIN 3.5 PCF) GLASS FIBER UNITS JACKETED ON THE OUTSIDE WITH AN ALL SERVICE JACKET. LONGITUDINAL JOINTS SEALED WITH METAL FASTENERS OR FACTORY-APPLIED SELF-SEALING LAP TAPE. TRANSVERSE JOINTS SEALED WITH METAL FASTENERS OR WITH BUTT STRIP TAPE SUPPLIED WITH THE PRODUCT. WHEN NOM 1 IN. THICK PIPE COVERING IS USED, THE ANNULAR SPACE BETWEEN THE PIPE COVERING AND THE CIRCULAR CUTOUT IN THE GYPSUM WALLBOARD LAYERS ON EACH SIDE OF THE WALL SHALL BE MIN 1/4 IN. TO MAX 3/8 IN. WHEN NOM 2 IN. THICK PIPE COVERING IS USED, THE ANNULAR SPACE BETWEEN THE PIPE COVERING AND THE CIRCULAR CUTOUT IN THE GYPSUM WALLBOARD LAYERS ON EACH SIDE OF THE WALL SHALL BE MIN 1/2 IN. TO MAX 3/4 IN.
SEE PIPE AND EQUIPMENT COVERING MATERIALS (BRGU) CATEGORY IN BUILDING MATERIALS DIRECTORY FOR NAMES OF MANUFACTURERS. ANY PIPE COVERING MATERIAL MEETING THE ABOVE SPECIFICATIONS AND BEARING THE UL CLASSIFICATION MARKING WITH A FLAME SPREAD INDEX OF 25 OR LESS AND A SMOKE DEVELOPED INDEX OF 50 OR LESS MAY BE USED.
THE HOURLY T RATING OF THE FIRESTOP SYSTEM IS 3/4 HR WHEN NOM 1 IN. THICK PIPE COVERING IS USED. THE HOURLY T RATING OF THE FIRESTOP SYSTEM IS 1 HR AND 1-1/2 HR WHEN NOM 2 IN. THICK PIPE COVERING IS USED WITH 1 HR AND 2 HR FIRE RATED WALLS, RESPECTIVELY.

(4) FIRESTOP SYSTEM-INSTALLED SYMMETRICALLY ON BOTH SIDES OF WALL ASSEMBLY. THE DETAILS OF THE FIRESTOP SYSTEM SHALL BE AS FOLLOWS:
A. FILL, VOID OR CAVITY MATERIALS*-WRAP STRIP-NOM 1/4 IN. THICK INTUMESCENT ELASTOMERIC MATERIAL FACED ON ONE SIDE WITH ALUMINUM FOIL, SUPPLIED IN 2 IN. WIDE STRIPS. NOM 2 IN. WIDE STRIP TIGHTLY WRAPPED AROUND PIPE COVERING (FOIL SIDE OUT) WITH SEAM BUTTED. WRAP STRIP LAYER SECURELY BOUND WITH STEEL WIRE OR ALUMINUM FOIL TAPE AND SLID INTO ANNULAR SPACE APPROX 1-1/4 IN. SUCH THAT APPROX 3/4 IN. OF THE WRAP STRIP WIDTH PROTRUDES FROM THE WALL SURFACE. ONE LAYER OF WRAP STRIP IS REQUIRED WHEN NOM 1 IN. THICK PIPE COVERING IS USED. TWO LAYERS OF WRAP STRIP ARE REQUIRED WHEN NOM 2 IN. THICK PIPE COVERING IS USED.
MINNESOTA MINING & MFG. CO.-FS-195+
B. FILL, VOID OR CAVITY MATERIALS*-CAULK-MIN 1/4 IN. DIAM CONTINUOUS BEAD APPLIED TO THE WRAP STRIP/WALL INTERFACE AND TO THE EXPOSED EDGE OF THE WRAP STRIP LAYER APPROX 3/4 IN. FROM THE WALL SURFACE.
MINNESOTA MINING & MFG. CO.-CP 25WB+
*BEARING THE UL CLASSIFICATION MARKING

4 PENETRATION DETAIL

12" = 1'-0"

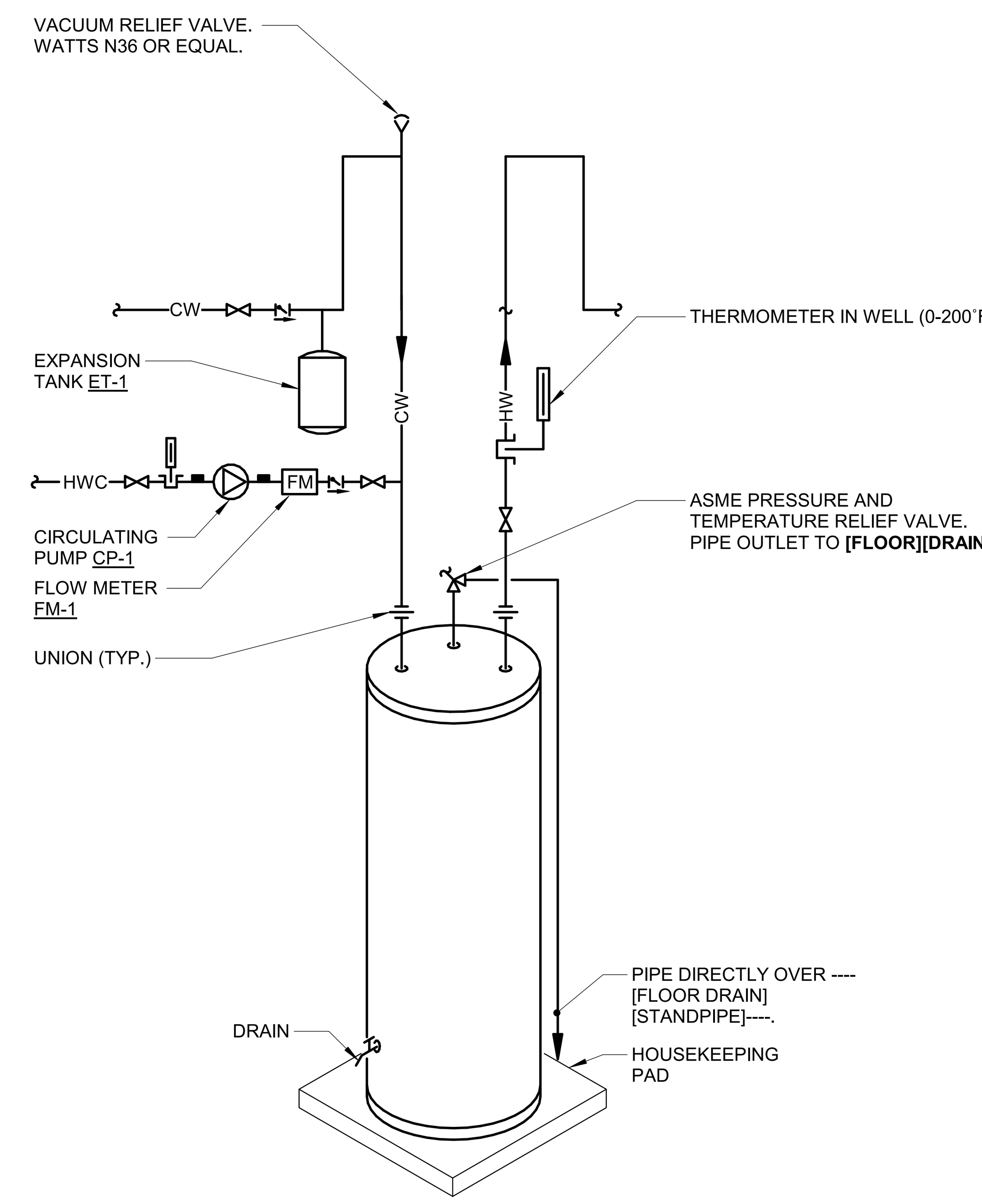

3 WATER HEATER - ELECTRIC TANK - W/ HWC

12" = 1'-0"

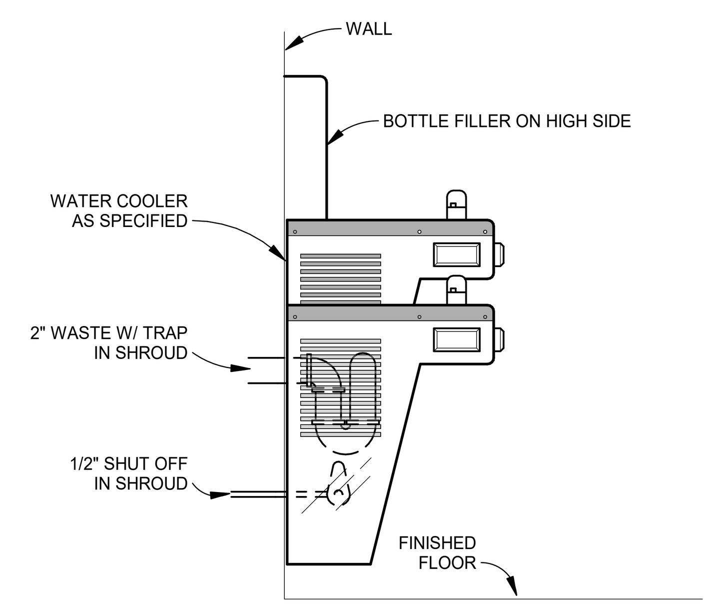

2 ELECTRIC WATER COOLER DETAIL

1/8" = 1'-0"

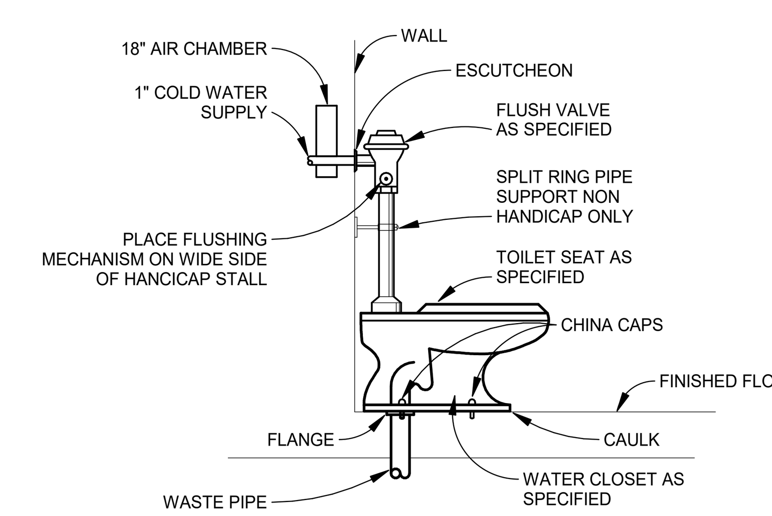

1 WATER CLOSET DETAIL

1/8" = 1'-0"

IMEG
3221 BLUE RIDGE ROAD
SUITE 113
RALEIGH, NC 27612
P: 919.571.1111
www.imegcorp.com

IMEG RESERVES PROPRIETARY RIGHTS, INCLUDING COPYRIGHTS, TO THIS DRAWING AND THE DATA SHOWN THEREON. SAID DRAWING AND/OR DATA ARE THE EXCLUSIVE PROPERTY OF IMEG AND SHALL NOT BE USED OR REPRODUCED FOR ANY OTHER PROJECT WITHOUT THE EXPRESS WRITTEN APPROVAL AND PARTICIPATION OF IMEG.
©2026 IMEG CONSULTANTS CORP.

North Carolina Design Registration #F-1507

0 1 2 3
REF. SCALE IN INCHES
PROJECT #26001727.00

OAKLEY COLLIER ARCHITECTS
OCA
109 Candlewood Road, Rocky Mount, NC 27804 (P) 252.937.2500
205 W. Martin Street, Raleigh, NC 27601

RENOVATION FOR:
CRAVEN COUNTY GOVERNMENT CENTER EAST
CRAVEN COUNTY
1208 E. MAIN STREET, HAVELOCK, NORTH CAROLINA 28532

NORTH CAROLINA PROFESSIONAL CORPORATION
IMEG CORPORATION No. F-1507

5/28/26
NORTH CAROLINA PROFESSIONAL SEAL 051195 ENGINEER PATRICK J. MCCABE
Patrick McCabe

GENERAL NOTE:
Prior to construction start. Contractor shall verify & be responsible for all Dimensions.

Revisions

#	Description	Date

Date	Project No.
05-28-26	26001727.00
Drawn By: FEA	Sheet No.
Checked By: DRD	P300

Sheet Title
PLUMBING DETAILS

Copyright © 2025 Oakley Collier Architects. These drawings are of the property of the Architect for use under his supervision. No reproduction or other use is allowed without permission.

PLUMBING MATERIAL LIST

TAG NAME	DESCRIPTION	MANUFACTURER AND MODEL
BP-1	LEAD FREE, DOUBLE CHECK VALVE WITH BALL VALVES AND STRAINER. MOUNT 24" ABOVE FINISHED FLOOR.	BACKFLOW PREVENTOR - WATTS (LF007MIQT-S), WILKINS (350XL-S), FEBCO (LF850)
CP-1	RECIRCULATING PUMP SHALL BE 1/6 HORSEPOWER, 120 VOLT, SINGLE PHASE. PROVIDE PUMP WITH MOUNTING BRACKET, TIMER, AQUASTAT AND DISCONNECT, DISCONNECT WIRING BY LICENSED ELECTRICAL CONTRACTOR.	PUMP - B&G (PL36).
EWC-1	PROVIDE WITH FRONT AND SIDE CONTROLS, SHUT-OFF VALVE, CARRIER, AND TRAP. PROVIDE STAINLESS STEEL FINISH. PROVIDE WITH BOTTLE FILLER.	ELECTRIC WATER COOLER - ELKAY (LZSTL8WS), OASIS (P8SBFSL), HALSEY TAYLOR (HTHB-HACDBLPV-WF)
FD-1	FLOOR DRAIN TO HAVE A 3" WASTE BOTTOM OUTLET, CAST IRON BODYWITH ADJUSTABLE COLLAR, POLISHED 6" x 6" NICKEL BRONZE SQUARE HEELPROOF STRAINER, AND 1/2" TRAP PRIMER CONNECTION.	FLOOR DRAIN - ZURN (ZN415S), WATTS (FD-100-M), MIFAB (F11000-1)
IM-1	PLASTIC ICE MAKER BOX WITH 1/4 TURN BRASS BALL VALVE WITH HAMMER ARRESTOR - COPPER SWEAT AND SUPPLY TUBE TO REFRIGERATOR. COORDINATE MOUNTING HEIGHT WITH ARCHITECT.	ICE MAKER BOX - OATEY CO. (38570), GUY GRAY (AB9700 HA), SIOUX CHIEF (696-G-1010MF)
L-1	WALL HUNG LAVATORY SHALL BE MADE OF VITREOUS CHINA WITH A WHITE FINISH. HAVE 4" CENTERS, AN OVERFLOW. SEE ARCHITECTURAL DRAWINGS FOR MOUNTING HEIGHT. DECK MOUNTED FAUCET SHALL BE CHROME FINISH, SINGLE LEVER, 4" CENTERS, WITH 3/8" COPPER SUPPLY TUBE INLETS, AND PROVIDED WITH AN AERATOR. RIGID SUPPLY KIT SHALL INCLUDE CHROME PLATED BRASS STOPS WITH THREADED CONNECTIONS, FULL TURN BRASS STEM, REDUCER, AND FLANGE. INLET SHALL BE 3/8" IPS. OUTLET SHALL BE 3/8" IPS. P-TRAP SHALL BE CHROME PLATED CAST BRASS BODY WITH CLEANOUT, CAST BRASS ELBOW AND CAST BRASS SLIP NUT, AND FLANGE. PROVIDE WITH OFFSET DRAIN, TRUEBRO LAV SHIELD, WALL HANGER, AND WATER TEMPERATURE LIMITING DEVICE THAT CONFORMS TO ASSE 1070 OR CSA B125.3.	LAVATORY - AMERICAN STANDARD (0356.041), KOHLER (K-2032-0), ZURN TRIM - DELTA (523LF-HGMHDF), CHICAGO FAUCET (2200-4), MOEN (8470). TRAP - MCGUIRE (8902), DEARBORN BRASS (702-1), KOHLER (K-8999). SUPPLY - MCGUIRE (158LK), BRASS CRAFT (R1912AC), KOHLER (K-7605-P-CP).
MB-1	MOP RECEPTOR SHALL BE 24" x 24" x 12" DEEP WITH ONE PIECE STAINLESS STEEL CAP, NO FLANGES.	MOP BASIN - STERN WILLIAMS (SB-900), FIAT (TSB100). TRIM - STERN WILLIAMS (T-10-VB), CHICAGO FAUCETS (897RCF), MOEN (8124). HOSE - STERN WILLIAMS (T-35), FIAT (832AA). MOP BRACKET - STERN WILLIAMS (T-40), FIAT (889CC).
SA-1	SHOCK ABSORBERS SHALL HAVE A STAINLESS STEEL CASING. FLEXIBLE MECHANICAL BELLOWS. PRESSURIZED INERT GAS CHAMBER AND CERTIFICATION STAMP AS CONFORMING TO STANDARD PDI WH-201 OF THE PLUMBING AND DRAINAGE INSTITUTE.	SHOCK ABSORBER - JOSAM (75000), WADE (4480), ZURN (Z1700)
SK-1	SINK IS TO BE 18 GAUGE STAINLESS STEEL, SELF-RIMMING. DECK MOUNTED FAUCET SHALL BE CHROME FINISHED, WITH 1/2" INLET AND PROVIDED WITH AN AERATOR. RIDGID SUPPLY KIT SHALL INCLUDE CHROME PLATED BRASS STOPS WITH THREADED CONNECTIONS AND FLANGE. INLET AND OUTLET SHALL BE 3/8" IPS. PROVIDE WITH McGUIRE PROWRAP INSULATOR. PROVIDE WITH SPRAYER, DISHWASHER CONNECTION, AND DISPOSAL IF REQUIRED BY ARCHITECT.	SINK - ELKAY (LR-3319), JUST (DL-1933-A-GR). SINK TRIM - DELTA (400), MOEN (7437), KOHLER. TRAP - MCGUIRE (8902), DEARBORN BRASS (702-1), KOHLER (K8999). SUPPLY - MCGUIRE (170), BRASSCRAFT (CS400AC), KOHLER (K-76-6-P). STRAINER - ELKAY (LK-99), JUST (JB-99), DEARBORN (L7).
SP-1	ZOELLER OIL SMART SYSTEM INCLUDES: SUMP PUMP, PUMP SWITCH, SENSOR, AND ALARM. SUMP PUMP, 1/2 HP, 120 VOLT, SINGLE PHASE, 52 GPM @ 20' HEAD. PROVIDE WITH CHECK VALVE AND DISCONNECT, WIRING BY LICENSED ELECTRICAL CONTRACTOR. PROVIDE WITH ZOELLER OIL SMART PUMP SWITCH, ALARM, AND SENSOR.	SUMP PUMP - ZOELLER (S40-0007)
WC-1	FLOOR MOUNTED, FLUSH VALVE TOILET SHALL BE MADE OF VITREOUS CHINA WITH A WHITE FINISH AND A 12" ROUGH-IN AND 1 1/2" TOP SPUD. SEAT SHALL BE EXTRA HEAVY WEIGHT SOLID PLASTIC WITH OPEN FRONT LESS COVER FOR ELONGATED BOWL. EXPOSED CHROME PLATED FLUSH VALVE WITH 1 1/2" CHROME PLATED SPUD COUPLING AND FLANGE, THE FLUSH VALVE MECHANISM SHALL BE PLACED ON THE WIDE SIDE OF THE STALL.	WATER CLOSET - AMERICAN STANDARD (2305.100), KOHLER (K-96057-0), SLOAN (ST-2029). FLUSH VALVE - SLOAN (111), DELANY (F402-1), ZURN (Z6000-WS1). SEAT - BEMIS (1655SSC), CHURCH (9500C), KOHLER (K-4670-C-0).
WH-1	ELECTRIC WATER HEATER SHALL HAVE A 40 GALLON STORAGE CAPACITY, AN ELECTRIC INPUT OF 4.5 KW AT 208 VOLT, SINGLE PHASE AND A RECOVERY OF 19 GPH AT A 100° RISE. PROVIDE WITH THERMOSTATIC MIXING VALVE SET AT 110°F. EXPANSION TANK AND HEAVY DUTY FUSIBLE DISCONNECT, WIRING BY LICENSED ELECTRICAL CONTRACTOR. WATER HEATER TO BE PROVIDED WITH HEAT TRAPS AND MEET THE ENERGY EFFICIENCY REQUIREMENT PER 2018 NORTH CAROLINA STATE BUILDING CODE: ENERGY CONSERVATION CODE.	WATER HEATER - STATE INDUSTRIES (PCE 40 20LSA), A.O. SMITH, LOCHINVAR.

PLUMBING FIXTURE UNIT SCHEDULE

		COLD WATER		HOT WATER		SUPPLY WATER		DRAINAGE	
TAG NAME	DESCRIPTION	EA.	TOTAL	EA.	TOTAL	EA.	TOTAL	EA.	TOTAL
EWC-1	ELECTRIC WATER COOLER	0.3	0.6	0	0	0.3	0.6	0.5	1
FD-1	FLOOR DRAIN	0	0	0	0	0	0	2	4
IM-1	ICE MAKER BOX	1	2	0	0	1	2	0	0
L-1	LAVATORY	0.5	5	0.5	5	0.7	7	1	10
MB-1	MOP BASIN	2.3	2.3	2.3	2.3	3	3	2	2
SK-1	SINK	1	2	1	2	1.4	2.8	2	4
WC-1	WATER CLOSET	10	100	0	0	10	100	6	60
GRAND TOTALS			111.9		9.3		115.4		81

OAKLEY COLLIER ARCHITECTS
OCA
109 Candlewood Road, Rocky Mount, NC 27804 (P) 252.937.2500
205 W. Martin Street, Raleigh, NC 27601

RENOVATION FOR:
CRAVEN COUNTY GOVERNMENT CENTER EAST
CRAVEN COUNTY
1208 E. MAIN STREET, HAVELOCK, NORTH CAROLINA 28532

NORTH CAROLINA PROFESSIONAL CORPORATION
IMEG CORPORATION No. F-1507

5/28/26
NORTH CAROLINA PROFESSIONAL SEAL 051195 ENGINEER PATRICK R. DEVINE

GENERAL NOTE:
Prior to construction start. Contractor shall verify & be responsible for all Dimensions.

Revisions

#	Description	Date

Date	Project No.
05-28-26	26001727.00
Drawn By: FEA	Sheet No.
Checked By: DRD	P400

Sheet Title
PLUMBING SCHEDULES

IMEG
www.imegcorp.com
3221 BLUE RIDGE ROAD
SUITE 113
RALEIGH, NC 27612
P: 919.571.1111

IMEG RESERVES PROPRIETARY RIGHTS, INCLUDING COPYRIGHTS, TO THIS DRAWING AND THE DATA SHOWN THEREON. SAID DRAWING AND/OR DATA ARE THE EXCLUSIVE PROPERTY OF IMEG AND SHALL NOT BE USED OR REPRODUCED FOR ANY OTHER PROJECT WITHOUT THE EXPRESS WRITTEN APPROVAL AND PARTICIPATION OF IMEG.
©2026 IMEG CONSULTANTS CORP.

North Carolina Design Registration #F-1507

0 1 2 3
REF. SCALE IN INCHES
PROJECT #26001727.00

Copyright © 2025 Oakley Collier Architects. These drawings are of the property of the Architect for use under his supervision. No reproduction or other use is allowed without permission.

VIEW KEY

NAME ← LEVEL NAME
10'-0" ← HEIGHT ABOVE PROJECT 0'-0"

(1) ← KEYNOTE: INDICATES NOTE USED TO DESCRIBE ADDITIONAL INFORMATION ABOUT WORK REQUIRED, SPECIFIC TO THE SHEET AND/OR DETAIL

INDICATES DIRECTION OF TRUE NORTH
PLAN OR DETAIL NUMBER
PLAN OR DETAIL NAME
NORTH — 1 — **VIEW NAME**
1/8" = 1'-0"
PLAN OR DETAIL SCALE

SIM — INDICATES SIMILAR DETAIL REFERENCED IN MULTIPLE LOCATIONS — SIM
1 — DETAIL REFERRED TO BY SECTION CUT — 1 2 3 4
M101 — SHEET DETAIL IS LOCATED ON — T101

LINE TYPE AND TAG KEY:

NEW WORK BY THIS CONTRACTOR (WIDE LINE)
NEW
EXISTING TO BE REMOVED (SHORT DASHED PATTERN)
NEW UNDERFLOOR OR UNDERGROUND (LONG DASHED PATTERN)

EXISTING TO REMAIN OR WORK BY OTHERS (NARROW LINE)
EXISTING
EXISTING TO BE REMOVED BY OTHERS (SHORT DASHED PATTERN)
EXISTING UNDERFLOOR OR UNDERGROUND (LONG DASHED PATTERN)

HALFTONING DOES NOT MODIFY SCOPE.

'TAG'-E — TAGS WITH DASH 'E' INDICATES THE REFERENCED OBJECT IS EXISTING

TAG-1 — UNDERLINED TAG INDICATES OBJECT IS IN-SCOPE. IF NEW, ADDITIONAL INFORMATION IS AVAILABLE IN A SCHEDULE, MATERIAL LIST, OR SYMBOL LIST

INDICATES AN EXISTING SYSTEM'S POINT OF CONNECTION/REMOVAL

FIRE / SMOKE BARRIER DESIGNATIONS

FIRE AND SMOKE SEPARATIONS ARE NOT SHOWN ON THESE DOCUMENTS. CONTRACTOR SHALL REVIEW THE ARCHITECTURAL PLANS AND DETERMINE THE LOCATIONS OF ALL FIRE AND SMOKE PARTITIONS, BARRIERS, AND WALLS. THIS INCLUDES FLOOR RATINGS. PRICING SHALL INCLUDE ALL MATERIALS AND LABOR REQUIRED TO MAINTAIN THE RATINGS OF ALL RATED SEPARATIONS, WHETHER SHOWN ON THE ENGINEERING PLANS OR NOT.

APPLICABLE CODES

CONTRACTOR SHALL COMPLY WITH APPLICABLE CODES AND LOCAL AMENDMENTS INCLUDING, BUT NOT LIMITED TO, THE FOLLOWING:

ELECTRICAL CODE:	NEC 2020
ENERGY CONSERVATION CODE:	NCECC 2018

CONTRACTOR ABBREVIATION KEY

ABBR:	DESCRIPTION:
A.C.	ASBESTOS ABATEMENT CONTRACTOR
A.V.C.	AUDIO/VISUAL CONTRACTOR
C.C.	CIVIL CONTRACTOR
C.M.	CONSTRUCTION MANAGER
E.C.	ELECTRICAL CONTRACTOR
F.P.C.	FIRE PROTECTION CONTRACTOR
F.S.C.	FOOD SERVICE CONTRACTOR
G.C.	GENERAL CONTRACTOR
H.C.	HEATING CONTRACTOR
M.C.	MECHANICAL CONTRACTOR
N.C.C.	NURSE CALL CONTRACTOR
P.C.	PLUMBING CONTRACTOR
S.C.	SECURITY CONTRACTOR
T.C.	TECHNOLOGY CONTRACTOR
T.C.C.	TEMPERATURE CONTROLS CONTRACTOR
V.C.	VENTILATION CONTRACTOR

MECHANICAL SYSTEMS, SERVICE SYSTEMS AND EQUIPMENT METHOD OF COMPLIANCE

PRESCRIPTIVE ☒ ENERGY COST BUDGET ☐

THERMAL ZONE: 3A

EXTERIOR DESIGN CONDITIONS
winter dry bulb: 23F
summer dry bulb: 91°F
relative humidity: 64%

INTERIOR DESIGN CONDITIONS
winter dry bulb: 70°F
summer dry bulb: 75°F
relative humidity: 50%

BUILDING HEATING LOAD: BLOCK LOAD = 49.7 MBH

BUILDING COOLING LOAD: BLOCK LOAD = 234 MBH (19.5 TONS)

MECHANICAL SPACING CONDITIONING SYSTEM
Unitary:
description of unit:
heating efficiency:
cooling efficiency:
heat output of unit:
cooling output of unit:
} SEE SCHEDULES ON SHEET M600

Boiler:
total boiler capacity. If oversized state reason.

Chiller:
total chiller capacity. If oversized state reason.

LIST EQUIPMENT EFFICIENCIES: SEE SCHEDULES ON SHEET(S)

EQUIPMENT SCHEDULES WITH MOTORS (MECHANICAL SYSTEMS)
motor horsepower:
number of phases:
minimum efficiency:
motor type:
# of poles:
} SEE SCHEDULES ON SHEET(S)

DESIGNER STATEMENT

To the best of my knowledge and belief, the design of this building complies with the mechanical systems, service systems and equipment requirements of the North Carolina State Energy Code,

SIGNED: Patrick McCabe

NAME: Pat J McCabe, P.E.

TITLE: Professional Engineer

OUTSIDE AIR SUMMARY

REQUIRED:

SS-1: 110:((0.06*145 SF) + (5*3 PPL)) + 111:((0.06*175 SF) + (5*1 PPL)) + 112:((0.06*208 SF) + (7.5*3 PPL)) = 75 CFM

SS-2: 100:((0.06*431 SF)) + 108:((0.06*125 SF) + (5*1 PPL)) + 107:((0.06*367SF) + (7.5*8 PPL)) + 109:((0.06*495 SF) + (5*32 PPL)) = 311 CFM

SS-3: 134:((0.06*1394 SF) + (7.5*14 PPL)) + 129:((0.06*275 SF) + (7.5*8 PPL)) + 133:((0.12*117 SF)) = 273 CFM

SS-4: 119:((0.06*211 SF) + (5*2 PPL)) + 120:((0.06*212 SF) + (5*1 PPL)) + 121:((0.06*109 SF) + (7.5*8 PPL)) + 122:((0.06*189 SF) + (5*1 PPL)) = 124 CFM

SS-5: 100:((0.06*416 SF)) + 123:((0.06*184 SF) + (5*9 PPL)) + 124:(0.06*125) + 125:(0.06*216) = 122 CFM

SS-6: 213:((0.06*500 SF) + (7.5*10 PPL)) + 217:((0.06*388 SF) + (5*4 PPL)) + 218:((0.06*262 SF) + (5*8 PPL)) + 219:(0.06*140 SF) + 200: (0.06*218 SF) = 226

SS-7: OFFICE:((0.06*946 SF) + (5*6 PPL)) + 200:(0.06*218 SF) = 100 CFM

TOTAL REQUIRED = 1,231 CFM

PROVIDED:

SS-1: 100 CFM
SS-2: 350 CFM
SS-3: 300 CFM
SS-4: 150 CFM
SS-5: 150 CFM
SS-6: 250 CFM
SS-7: 150 CFM

TOTAL PROVIDED = 1,450 CFM

SYMBOL LIST - SENSORS

SYMBOL	DESCRIPTION
(H)	HUMIDISTAT
(T)	THERMOSTAT
	TIME CLOCK

HVAC SHEET INDEX

M000	HVAC COVERSHEET - PP, V
M101	FIRST FLOOR PLAN - HVAC
M102	SECOND FLOOR PLAN - HVAC
M201	HVAC DETAILS
M202	HVAC DETAILS
M301	HVAC SCHEDULES
GRAND TOTAL: 6	

SYMBOL LIST - VENTILATION

SYMBOL	DESCRIPTION
SG-1 6/115	AIR TERMINAL PROPERTIES - TAG / NECK SIZE/CFM
	DUCT DOWN, DUCT UP

HVAC ABBREVIATION KEY

ABBR:	DESCRIPTION:
AD	ACCESS DOOR
AFF	ABOVE FINISHED FLOOR
C	COMMON
CO	CLEANOUT
CFSD	CONTROL/FIRE/SMOKE DAMPER
DN	DOWN
DPG (0-2")	DIFFERENTIAL PRESSURE GAUGE (RANGE)
DPS	DIFFERENTIAL PRESSURE SWITCH
EP	ELECTRICAL TO PNEUMATIC VALVE
FD	FIRE DAMPER
FOB	FLAT ON BOTTOM
FOT	FLAT ON TOP
FSD	FIRE/SMOKE DAMPER
MV	MIXING VALVE
N.C.	NORMALLY CLOSED
NIC	NOT IN CONTRACT
N.O.	NORMALLY OPEN
PS	PRESSURE SWITCH
SCCR	SHORT CIRCUIT CURRENT RATING
SD	SMOKE DAMPER
TAB	TERMINAL AIR BOX
TD	TRANSFER DUCT
TYP	TYPICAL
UC-1	DOOR UNDERCUT BY OTHERS (1" TYPICAL)
UON	UNLESS OTHERWISE NOTED

VENTILATION GENERAL NOTES:

1. UNLESS NOTED OTHERWISE, THE SIZE OF EACH BRANCH DUCT TO AN AIR TERMINAL (E.G. GRILLE, REGISTER, DIFFUSER) SHALL MATCH THE INLET SIZE.
2. UNLESS NOTED OTHERWISE, DUCT SIZES SHOWN ON DRAWINGS ARE INSIDE CLEAR DIMENSIONS. MAINTAIN CLEAR DIMENSIONS INSIDE ANY LINING
3. ALIGN TEMPERATURE SENSORS WITH LIGHT SWITCHES WHEN IN CLOSE PROXIMITY TO EACH OTHER.
4. PROVIDE ACCESS DOORS AT ALL DUCT MOUNTED EQUIPMENT.
5. EXISTING AIR INLET AND OUTLET CFM SHOWN ON DRAWINGS ARE FROM EXISTING DRAWINGS, AND ARE FOR REFERENCE ONLY. CONTRACTOR SHALL USE PRE-BALANCE VALUES, AND NOT EXISTING CFM SHOWN ON DRAWINGS.
6. CONTRACTOR MAY REUSE PORTIONS OF EXISTING DUCT PROVIDED SIZES AND PRESSURE CLASSES ARE CORRECT, DUCT IS THOROUGHLY CLEANED AND FREE OF DEFECTS, AND ALL TRANSVERSE JOINTS, LONGITUDINAL SEAMS, AND DUCT WALL PENETRATIONS ARE SEALED AS SPECIFIED FOR NEW DUCTWORK.

MECHANICAL RENOVATION NOTES:

THESE NOTES APPLY TO ALL MECHANICAL SHEETS AND TRADES, INCLUDING BUT NOT LIMITED TO, FIRE PROTECTION, PLUMBING, MEDICAL GAS, VENTILATION, PIPING AND TEMPERATURE CONTROL.

1. EXISTING CONDITIONS ARE SHOWN BASED ON INFORMATION OBTAINED FROM FIELD SURVEYS, EXISTING BUILDING DOCUMENTS, AND STAFF. VERIFY EXISTING CONDITIONS AND REPORT ANY CONFLICTS BEFORE PROCEEDING.
2. NOT ALL EXISTING DUCTWORK AND PIPING IS SHOWN. VERIFY EXISTING CONDITIONS BEFORE STARTING WORK. NOTIFY ENGINEER OF ANY CONFLICTS WITH NEW WORK.
3. FIELD VERIFY THE AVAILABLE CLEARANCES FOR DUCTWORK AND PIPING BEFORE FABRICATION. RISES AND DROPS MAY BE NECESSARY BECAUSE OF EXISTING FIELD CONDITIONS.
4. EACH CONTRACTOR SHALL FIELD VERIFY ACCESSIBILITY TO THE AREA OF THEIR WORK AND SHALL NOTIFY THE **GENERAL CONTRACTOR** PRIOR TO BIDDING IF OTHER UTILITIES ARE REQUIRED TO BE REMOVED OR RELOCATED TO ALLOW ACCESS TO THEIR AREA OF WORK.
5. THE GENERAL CONTRACTOR IS RESPONSIBLE FOR CUTTING, REMOVAL AND PATCHING OF ROOFS, WALLS, AND FLOORS ASSOCIATED WITH WORK BY ALL CONTRACTORS. CONTRACTORS SHALL NOTIFY THE GC OF AFFECTED AREAS PRIOR TO BIDDINGEACH CONTRACTOR SHALL CUT AND PATCH ROOFS, WALLS, AND FLOORS ASSOCIATED WITH THEIR WORK.
6. WHERE EXISTING MECHANICAL SYSTEMS DIFFER FROM THOSE SHOWN ON THE PROJECT DRAWINGS AND CREATE CONFLICTS WITH NEW EQUIPMENT, PIPING, OR DUCTWORK INSTALLATIONS, THE CONTRACTOR SHALL PROVIDE DETAILED DOCUMENTATION (SUCH AS SKETCHES, PHOTOS, AND DIMENSIONS) ALONG WITH RECOMMENDATIONS TO RESOLVE THE CONFLICT. THIS INFORMATION MUST BE SUBMITTED TO THE ENGINEER FOR REVIEW AND APPROVAL. NO WORK RELATED TO THE CONFLICT SHALL PROCEED UNTIL AN APPROVED RESOLUTION IS PROVIDED BY THE ENGINEER.
7. PROVIDE TEMPORARY CONNECTIONS TO MAINTAIN EXISTING SYSTEMS IN SERVICE DURING CONSTRUCTION. MAINTAIN ACCESS TO EXISTING MECHANICAL INSTALLATIONS THAT REMAIN ACTIVE.
8. OBTAIN PERMISSION FROM OWNER BEFORE SHUTTING DOWN ANY SYSTEM FOR ANY REASON. MAINTAIN SERVICE TO ALL COMPONENTS THAT ARE TO REMAIN UNTIL NEW SYSTEMS ARE INSTALLED.
9. MAINTAIN EXISTING SYSTEM IN SERVICE UNTIL NEW SYSTEM IS COMPLETE AND READY FOR TIE IN AND SWITCHOVER. DRAIN SYSTEM ONLY TO MAKE SWITCHOVERS AND CONNECTIONS. OBTAIN PERMISSION FROM OWNER BEFORE PARTIALLY OR COMPLETELY DRAINING SYSTEM. MAKE CHANGEOVER TO NEW SYSTEMS WITH MINIMUM OUTAGE.
10. DISCONNECT AND REMOVE MECHANICAL DEVICES AND EQUIPMENT SERVING EQUIPMENT THAT HAS BEEN REMOVED.
11. PROPERLY RECLAIM AND DISPOSE OF ALL REFRIGERANT IN REMOVED EQUIPMENT/ REFRIGERANT PIPING. RECLAIMED REFRIGERANT SHALL HAVE DOCUMENTATION AS REQUIRED BY THE AUTHORITY HAVING JURISDICTION (AHJ).

MECHANICAL GENERAL NOTES:

THESE NOTES APPLY TO ALL MECHANICAL SHEETS AND TRADES, INCLUDING BUT NOT LIMITED TO, FIRE PROTECTION, PLUMBING, MEDICAL GAS, VENTILATION, PIPING AND TEMPERATURE CONTROL.

1. DRAWINGS SHOWING LOCATIONS OF EQUIPMENT, DUCTWORK, PIPING, ETC. ARE DIAGRAMMATIC AND MAY NOT ALWAYS REFLECT EXACT INSTALLATION CONDITIONS. DRAWINGS SHOW THE GENERAL ARRANGEMENT OF DUCTWORK, PIPING, EQUIPMENT, ETC., AND MAY NOT INCLUDE ALL OFFSETS AND FITTINGS REQUIRED FOR COMPLETE INSTALLATION. THE DRAWINGS SHALL BE FOLLOWED AS CLOSELY AS ACTUAL BUILDING CONSTRUCTION AND THE WORK OF OTHERS WILL PERMIT.
2. CATALOG AND MODEL NUMBERS SHALL NOT BE CONSIDERED COMPLETE, BUT ARE GIVEN AS AN AID TO THE CONTRACTOR AND TO INDICATE THE QUALITY REQUIRED. CONTRACTOR IS RESPONSIBLE FOR THE COMPLETE DESCRIPTION OF MATERIAL SCHEDULED ON THESE DRAWINGS AND IN THE SPECIFICATIONS BEFORE ORDERING. THE DESCRIPTION OF THE MATERIAL AND SCHEDULED PERFORMANCE TAKES PRECEDENCE OVER THE MODEL NUMBER. THE FIRST MANUFACTURER SCHEDULED IS THE BASIS OF DESIGN.
3. DETERMINATION OF QUANTITIES OF MATERIAL AND EQUIPMENT REQUIRED SHALL BE MADE BY THE CONTRACTOR FROM THE DOCUMENTS. WHERE MATERIAL AND/OR QUANTITY DISCREPANCIES ARISE BETWEEN DRAWINGS, SCHEDULES AND/OR SPECIFICATIONS, THE HIGHER QUALITY/ GREATER NUMBER SHALL GOVERN.
4. DO NOT SCALE DRAWINGS. VERIFY ALL DIMENSIONS AND CLEARANCES FROM ARCHITECTURAL, STRUCTURAL, SUBMITTALS, AND OTHER APPROPRIATE DRAWINGS OR PHYSICALLY AT SITE. REVIEW ALL DRAWINGS, INCLUDING THOSE OF OTHER TRADES.
5. COORDINATE ALL WORK WITH ALL OTHER TRADES PRIOR TO INSTALLATION TO PROVIDE CLEARANCES REQUIRED FOR OPERATION, MAINTENANCE, CODE COMPLIANCE, AND TO VERIFY NON-INTERFERENCE WITH OTHER WORK. DO NOT FABRICATE PRIOR TO VERIFICATION OF NECESSARY CLEARANCES FOR ALL TRADES. BRING ANY INTERFERENCES OR CONFLICTS TO THE ATTENTION OF THE ARCHITECT/ENGINEER BEFORE PROCEEDING WITH FABRICATION OR EQUIPMENT ORDERS.
6. REVIEW SPACE REQUIREMENTS OF EQUIPMENT SPECIFIED OR SUBSTITUTED AND MAKE REASONABLE ACCOMMODATIONS IN LAYOUT AND POSITIONING TO PROVIDE PROPER ACCESS.
7. ANY CHANGES REQUIRED TO ELIMINATE CONFLICTS OR THAT RESULT FROM A FAILURE TO COORDINATE SHALL BE MADE BY THE CONTRACTOR WITHOUT ADDITIONAL COST OR EXPENSE TO OTHERS.
8. EACH CONTRACTOR IS RESPONSIBLE FOR ALL COSTS ASSOCIATED WITH ELECTRICAL CHANGES REQUIRED FOR EQUIPMENT PROPOSED THAT DIFFERS FROM THE BASIS OF DESIGN.
9. REFER TO ARCHITECTURAL REFLECTED CEILING PLAN, ELECTRICAL, TECHNOLOGY AUDIO/VISUAL, AND OTHER MECHANICAL PLANS FOR EXACT LOCATIONS OF ALL CEILING MOUNTED DEVICES, OTHER THAN SPRINKLERS.
10. EACH CONTRACTOR IS RESPONSIBLE FOR DAMAGE CAUSED BY THEIR ACTIONS TO WALLS, FLOORS, CEILINGS, AND ROOFS. THE CONTRACTOR WHOSE WORK CAUSES DAMAGE IS RESPONSIBLE FOR PATCHING TO MATCH ORIGINAL CONSTRUCTION, FIRE RATING, AND FINISH.
11. IN AREAS WITH DRYWALL CEILINGS COORDINATE LOCATIONS OF ACCESS PANELS WITH THE GC FOR ACCESS TO VALVES, DUCTWORK ACCESSORIES, DAMPERS, ETC. COORDINATE PANEL TYPE AND COLOR WITH ARCHITECT. NOTIFY THE GC OF THE REQUIRED ACCESS PANELS PRIOR TO BIDDING.
12. SEAL ALL **FLOOR, WALL, AND ROOF** PENETRATIONS AIRTIGHT WHERE CONDUITS, PIPING, AND DUCTS PENETRATE. **PENETRATIONS THROUGH EXTERIOR WALLS AND ROOF SHALL BE SEALED AIRTIGHT WITH WATERPROOFING MATERIALS RECOMMENDED BY MANUFACTURER FOR OUTDOOR USE.**
13. CAULK ALL PIPE AND DUCT PENETRATIONS OF FULL HEIGHT NON-FIRE RATED WALL, PARTITION, FLOOR, AND ROOF ASSEMBLIES. THIS IS ESSENTIAL TO PREVENT NOISE TRANSMISSION FROM ONE ROOM TO ANOTHER AND TO PROVIDE THE DESIRED NC LEVELS WITHIN ROOMS.
14. WHERE PIPES AND DUCTS ARE SHOWN TO PENETRATE FLOORS, PROVIDE SLEEVED OPENINGS WITH THE TOP EDGE RAISED ABOVE FLOOR SURFACE IN ACCORDANCE WITH ALL RELEVANT SPEC SECTIONS. SEAL SLEEVE PERIMETER TO BE WATERTIGHT.
15. EQUIPMENT SIZES AND SERVICE CLEARANCE REQUIREMENTS VARY AMONG DIFFERENT MANUFACTURERS. CONSULT APPROVED SHOP DRAWINGS FOR EQUIPMENT SIZES AND REQUIRED SERVICE CLEARANCES. COORDINATE WITH LAYOUT OF EQUIPMENT PADS, PIPING, DUCTWORK, ETC.
16. DO NOT BLOCK TUBE PULL OR EQUIPMENT SERVICE CLEARANCES.
17. MAINTAIN A MINIMUM WORKING CLEARANCE OF 3'-6" IN FRONT OF ALL ELECTRICAL EQUIPMENT REQUIRING MAINTENANCE, INSPECTION, AND TESTING INCLUDING BUT NOT LIMITED TO PANELS, DISTRIBUTION PANELS, SWITCHBOARDS, MOTOR CONTROL CENTERS, TRANSFORMERS, EQUIPMENT DISCONNECTS AND STARTERS.
18. MAINTAIN THE DEDICATED ELECTRICAL EQUIPMENT SPACE DEFINED BY THE WIDTH / DEPTH OF ELECTRICAL EQUIPMENT MEASURED FROM THE FLOOR TO A HEIGHT 6'-0" ABOVE THE EQUIPMENT OR THE STRUCTURAL CEILING, WHICHEVER IS LOWER. SYSTEMS FOREIGN TO THE ELECTRICAL DISTRIBUTION SYSTEM ARE NOT ALLOWED IN THE DEDICATED ELECTRICAL SPACE INCLUDING: DUCTWORK, PIPING, ETC.
19. PROVIDE CONCRETE EQUIPMENT PADS FOR ALL FLOOR-MOUNTED EQUIPMENT. PADS SHALL EXTEND A MINIMUM OF 6 INCHES BEYOND ALL SIDES OF EQUIPMENT, UNLESS SUCH EXTENSION WOULD ENCROACH ON REQUIRED WORKING CLEARANCES AT CONTROL PANELS OR ELECTRICAL EQUIPMENT. PROVIDE 1/2-INCH CHAMFER (45-DEGREE) OR 1/2-INCH RADIUS AT ALL HORIZONTAL EDGES.
20. DO NOT EXCEED 25 LBS PER HANGER AND A MINIMUM SPACING OF 2'-0" ON CENTER WHEN ATTACHING TO METAL ROOF DECKING (LIMITATION NOT REQUIRED WITH CONCRETE ON METAL DECK). THIS 25 LBS. LOAD AND 2'-0" SPACING INCLUDE ADJACENT ELECTRICAL AND ARCHITECTURAL ITEMS HANGING FROM DECK. IF THE HANGER RESTRICTIONS CANNOT BE ACHIEVED, SUPPLEMENTAL FRAMING OFF STEEL FRAMING SHALL BE ADDED. ANCHORS EMBEDDED IN CONCRETE SHALL BE CRACKED CONCRETE APPROVED IN ACCORDANCE WITH SPECIFICATIONS.

MECHANICAL DEMOLITION GENERAL NOTE:

MECHANICAL CONTRACTOR SHALL DEMOLISH ALL EXISTING MECHANICAL EQUIPMENT AND ALL ASSOCIATED DUCTWORK, AIR DISTRIBUTION, CONTROLS, ETC. CONTRACTOR SHALL PATCH ALL EXISTING PENETRATIONS THRU ROOF / WALLS AS REQUIRED.

IMEG
3221 BLUE RIDGE ROAD
SUITE 113
RALEIGH, NC 27612
P: 919.571.1111
www.imegcorp.com

IMEG RESERVES PROPRIETARY RIGHTS, INCLUDING COPYRIGHTS, TO THIS DRAWING AND THE DATA SHOWN THEREON. SAID DRAWING AND/OR DATA ARE THE EXCLUSIVE PROPERTY OF IMEG AND SHALL NOT BE USED OR REPRODUCED FOR ANY OTHER PROJECT WITHOUT THE EXPRESS WRITTEN APPROVAL AND PARTICIPATION OF IMEG.
©2026 IMEG CONSULTANTS CORP.
North Carolina Design Registration #F-1507
0 1 2 3
REF. SCALE IN INCHES — PROJECT #26001727.00

OAKLEY COLLIER ARCHITECTS
OCA
109 Candlewood Road, Rocky Mount, NC 27804 (P) 252.937.2500
205 W. Martin Street, Raleigh, NC 27601

RENOVATION FOR:
CRAVEN COUNTY GOVERNMENT CENTER EAST
CRAVEN COUNTY
1208 E. MAIN STREET, HAVELOCK, NORTH CAROLINA 28532

NORTH CAROLINA PROFESSIONAL CORPORATION — IMEG CORPORATION No. F-1507

5/29/26
NORTH CAROLINA PROFESSIONAL ENGINEER SEAL 051195 PATRICK J. MCCABE

GENERAL NOTE:
Prior to construction start. Contractor shall verify & be responsible for all Dimensions.

Revisions
#	Description	Date

Date: 05-28-26	Project No.: 26001727.00
Drawn By: PJM	Sheet No.: M000
Checked By: GWD	

Sheet Title
HVAC COVERSHEET - PP, V

Copyright © 2025 Oakley Collier Architects. These drawings are of the property of the Architect for use under his supervision. No reproduction or other use is allowed without permission.

KEYNOTE: #

1. PROVIDE LOUVERED DOOR.
2. 1-HR RATED WALL, TYPICAL.
3. TERMINATE EXHAUST WITH WALL CAP.
4. TERMINATE OUTSIDE AIR WITH WALL CAP.
5. OUTSIDE AIR DUCT TO ROOF CAP. SEE SIZE ON DOCUMENT.

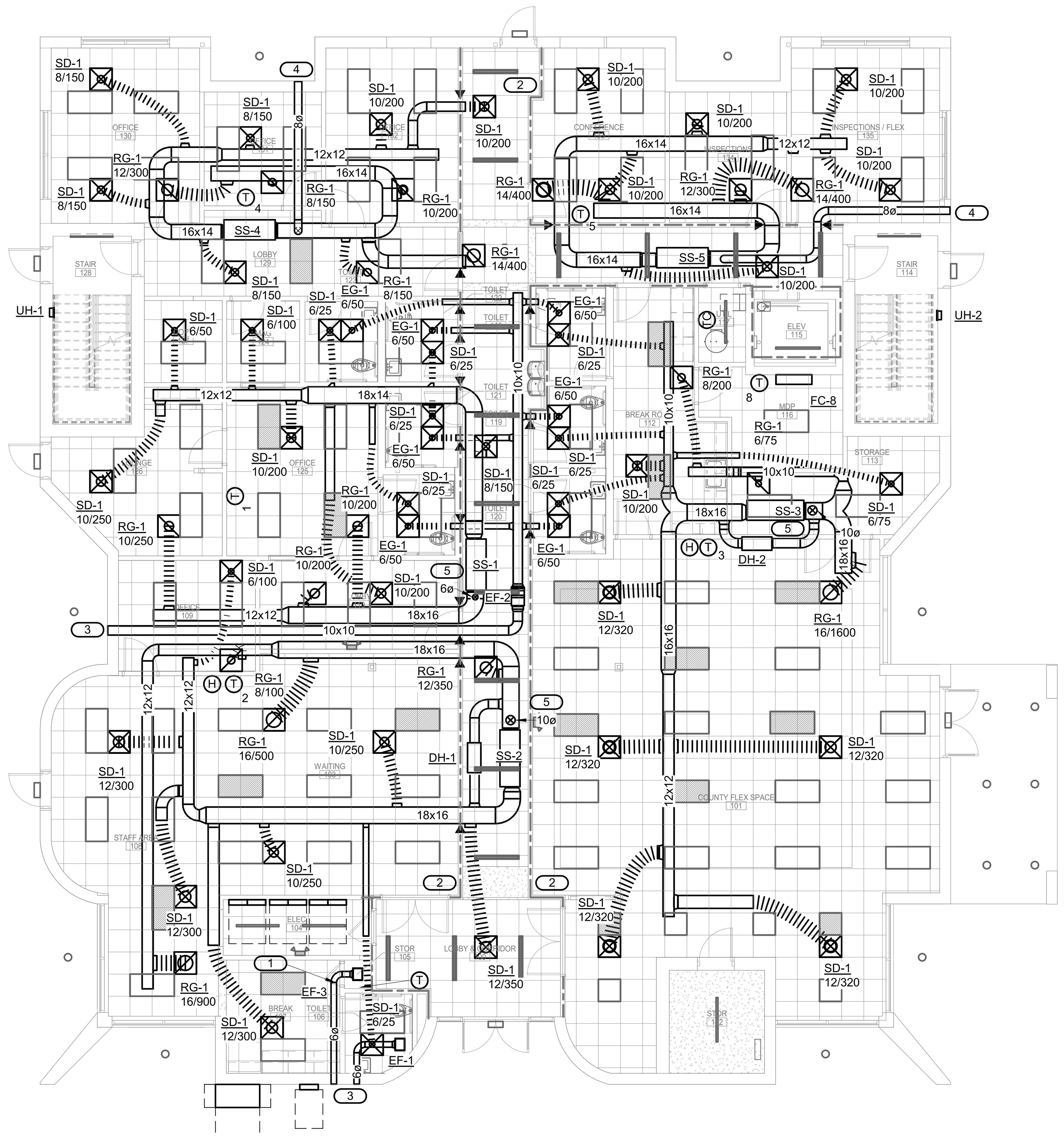

1 FIRST FLOOR PLAN - HVAC

1/8" = 1'-0"

OCA
OAKLEY COLLIER ARCHITECTS
109 Candlewood Road, Rocky Mount, NC 27804 (P) 252.937.2500
205 W. Martin Street, Raleigh, NC 27601

RENOVATION FOR:

CRAVEN COUNTY GOVERNMENT CENTER EAST

CRAVEN COUNTY
1208 E. MAIN STREET, HAVELOCK, NORTH CAROLINA 28532

NORTH CAROLINA PROFESSIONAL CORPORATION IMEG CORPORATION No. F-1507

NORTH CAROLINA PROFESSIONAL ENGINEER SEAL 051195

5/29/26

GENERAL NOTE:
Prior to construction start, Contractor shall verify & be responsible for all Dimensions.

Revisions #	Description	Date

Date	Project No.
05-28-26	26001727.00
Drawn By: PJM	Sheet No. M101
Checked By: GWD	

Sheet Title
FIRST FLOOR PLAN - HVAC

IMEG
3221 BLUE RIDGE ROAD
SUITE 113
RALEIGH, NC 27612
P: 919.571.1111
www.imegcorp.com

IMEG RESERVES PROPRIETARY RIGHTS, INCLUDING COPYRIGHTS, TO THIS DRAWING AND THE DATA SHOWN THEREON. SAID DRAWING AND/OR DATA ARE THE EXCLUSIVE PROPERTY OF IMEG AND SHALL NOT BE USED OR REPRODUCED FOR ANY OTHER PROJECT WITHOUT THE EXPRESS WRITTEN APPROVAL AND PARTICIPATION OF IMEG.
©2026 IMEG CONSULTANTS CORP.

North Carolina Design Registration #F-1507

0 1 2 3
REF. SCALE IN INCHES
PROJECT #26001727.00

Copyright © 2025 Oakley Collier Architects. These drawings are of the property of the Architect for use under his supervision. No reproduction or other use is allowed without permission.

KEYNOTE: #

1. PROVIDE 8"Ø OUTSIDE DUCT UP TO ROOF CAP.
2. ROUTE 6"Ø EXHAUST DUCT TO EXTERIOR AND TERMINATE WITH WALL CAP.

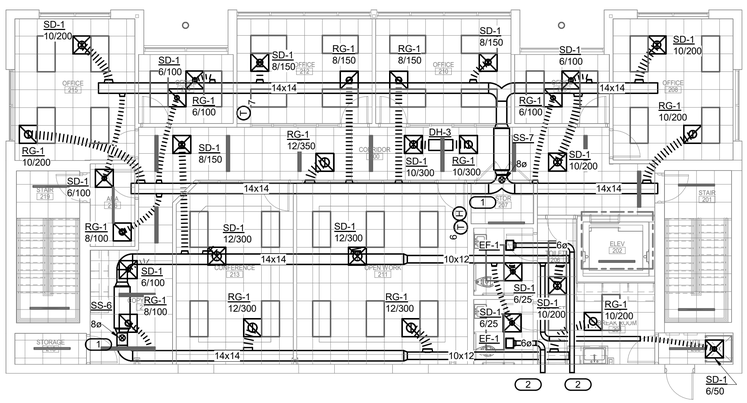

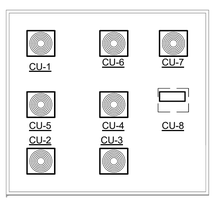

1 SECOND FLOOR PLAN - HVAC

1/8" = 1'-0"

OAKLEY COLLIER ARCHITECTS
OCA
109 Candlewood Road, Rocky Mount, NC 27804 (P) 252.937.2500
205 W. Martin Street, Raleigh, NC 27601

RENOVATION FOR:
CRAVEN COUNTY GOVERNMENT CENTER EAST
CRAVEN COUNTY
1208 E. MAIN STREET, HAVELOCK, NORTH CAROLINA 28532

NORTH CAROLINA PROFESSIONAL CORPORATION IMEG CORPORATION No. F-1507

5/28/26
NORTH CAROLINA PROFESSIONAL SEAL 051195 ENGINEER PATRICK J. MCCABE

GENERAL NOTE:
Prior to construction start. Contractor shall verify & be responsible for all Dimensions.

Revisions		
#	Description	Date

Date	Project No.
05-28-26	26001727.00
Drawn By: PJM	Sheet No. M102
Checked By: GWD	

Sheet Title: SECOND FLOOR PLAN - HVAC

IMEG
www.imegcorp.com
3221 BLUE RIDGE ROAD
SUITE 113
RALEIGH, NC 27612
P: 919.571.1111

IMEG RESERVES PROPRIETARY RIGHTS, INCLUDING COPYRIGHTS, TO THIS DRAWING AND THE DATA SHOWN THEREON. SAID DRAWING AND/OR DATA ARE THE EXCLUSIVE PROPERTY OF IMEG AND SHALL NOT BE USED OR REPRODUCED FOR ANY OTHER PROJECT WITHOUT THE EXPRESS WRITTEN APPROVAL AND PARTICIPATION OF IMEG.
©2026 IMEG CONSULTANTS CORP.

North Carolina Design Registration #F-1507

0 1 2 3
REF. SCALE IN INCHES

PROJECT #26001727.00

Copyright © 2025 Oakley Collier Architects. These drawings are of the property of the Architect for use under his supervision. No reproduction or other use is allowed without permission.

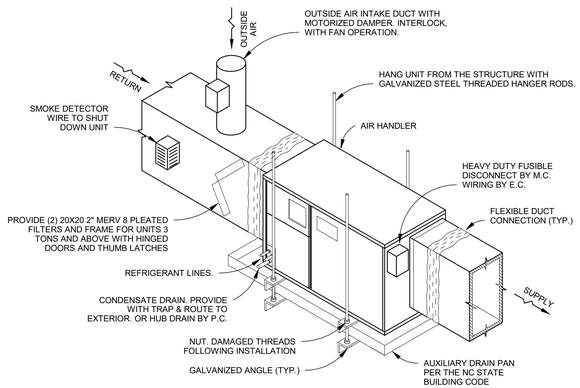

NOTE:

PROVIDE WITH OVERFLOW FLOAT SWITCH. THE M.C. SHALL WIRE TO SHUT DOWN FAN.

1 HOR SUSPENDED DETAIL
NO SCALE

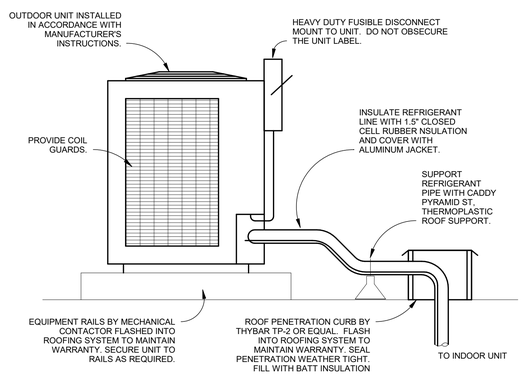

2 ROOF MOUNT DETAIL
NO SCALE

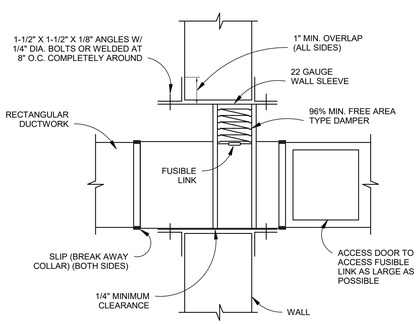

NOTE:

DETAIL FOR REFERENCE ONLY. DAMPERS SHALL BE INSTALLED PER MANUFACTURER'S INSTALLATION INSTRUCTIONS. DO NOT FIRE STOP THE GAP BETWEEN THE FIRE DAMPER SLEEVE AND THE PENETRATION UNLESS SPECIFICALLY CALLED FOR IN THE MANUFACTURER'S INSTALLATION INSTRUCTIONS.

3 FIRE DAMPER DETAIL
NO SCALE

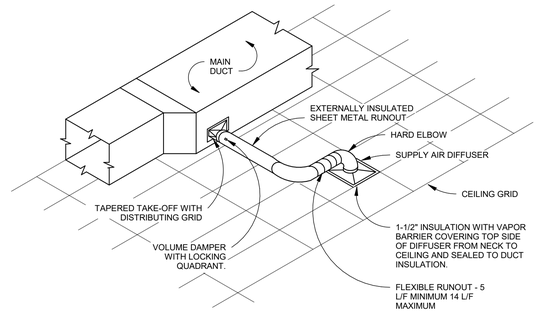

4 LAY-IN SUPPLY DETAIL
NO SCALE

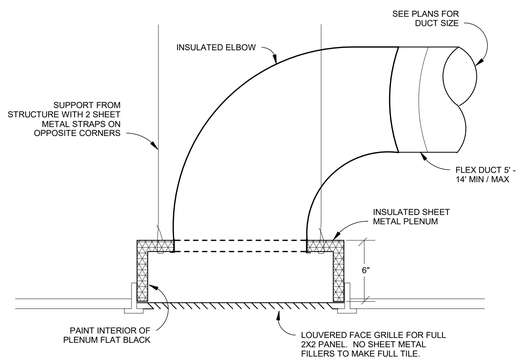

5 LAY IN RETURN DETAIL
NO SCALE

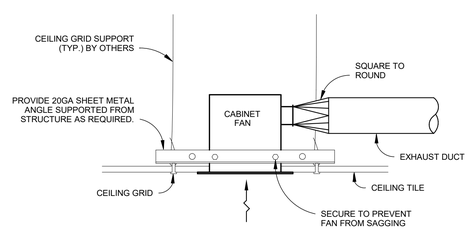

6 LAY-IN CABINET DETAIL
NO SCALE

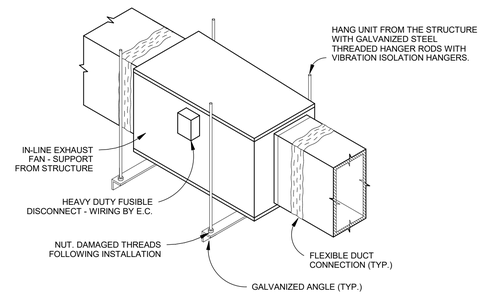

7 IN-LINE DIRECT DRIVE FAN DETAIL
NO SCALE

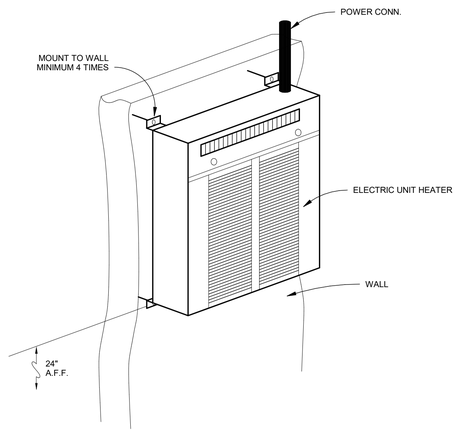

8 UNIT HTR STANDARD DETAIL
NO SCALE

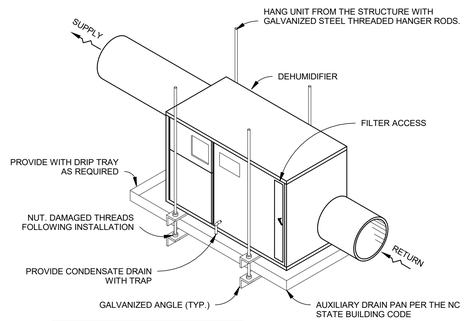

NOTE:
PROVIDE WITH OVERFLOW FLOAT SWITCH. THE M.C. SHALL WIRE TO SHUT DOWN FAN.

9 DEHUMIDIFIER SUSPENDED DETAIL
NO SCALE

IMEG
www.imegcorp.com
3221 BLUE RIDGE ROAD
SUITE 113
RALEIGH, NC 27612
P: 919.571.1111

IMEG RESERVES PROPRIETARY RIGHTS, INCLUDING COPYRIGHTS, TO THIS DRAWING AND THE DATA SHOWN THEREON. SAID DRAWING AND/OR DATA ARE THE EXCLUSIVE PROPERTY OF IMEG AND SHALL NOT BE USED OR REPRODUCED FOR ANY OTHER PROJECT WITHOUT THE EXPRESS WRITTEN APPROVAL AND PARTICIPATION OF IMEG.
©2026 IMEG CONSULTANTS CORP.
North Carolina Design Registration #F-1507

0 1 2 3
REF. SCALE IN INCHES
PROJECT #26001727.00

Copyright © 2025 Oakley Collier Architects. These drawings are of the property of the Architect for use under his supervision. No reproduction or other use is allowed without permission.

OAKLEY COLLIER ARCHITECTS
OCA
109 Candlewood Road, Rocky Mount, NC 27804 (P) 252.937.2500
205 W. Martin Street, Raleigh, NC 27601

RENOVATION FOR:
CRAVEN COUNTY GOVERNMENT CENTER EAST
CRAVEN COUNTY
1208 E. MAIN STREET, HAVELOCK, NORTH CAROLINA 28532

NORTH CAROLINA PROFESSIONAL ENGINEER SEAL
IMEG CORPORATION
No. F-1507

5/29/26
NORTH CAROLINA PROFESSIONAL ENGINEER SEAL
051195
PATRICK J. MCCABE

GENERAL NOTE:
Prior to construction start. Contractor shall verify & be responsible for all Dimensions.

Revisions

#	Description	Date

Date 05-28-26	Project No. 26001727.00
Drawn By PJM	Sheet No. M201
Checked By GWD	

Sheet Title
HVAC DETAILS

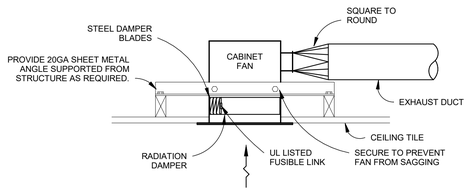

1 HARD CEILING CABINET DAMPER DETAIL

NO SCALE

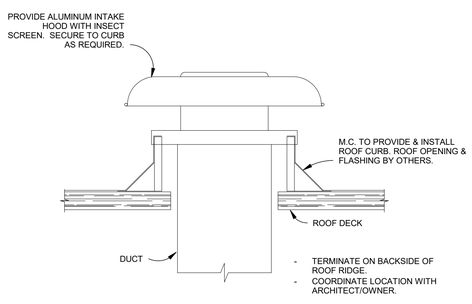

2 GRAVITY VENT ROUND DETAIL

NO SCALE

SYSTEM NO. WL5001

F RATING - 1 AND 2 HOUR
T RATING - 3/4, 1 AND 1 1/2 HR
L RATING AT AMBIENT - 2 CFM/SQ FT
L RATING AT 400 F - LESS THAN 1 CFM/SQ FT

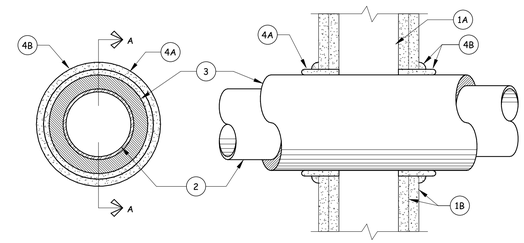

SECTION A - A

1. WALL ASSEMBLY-THE 1 OR 2 HR FIRE-RATED GYPSUM WALLBOARD/STUD WALL ASSEMBLY SHALL BE CONSTRUCTED OF THE MATERIALS AND IN THE MANNER DESCRIBED IN THE INDIVIDUAL U300 OR U400 SERIES WALL OR PARTITION DESIGN IN THE UL FIRE RESISTANCE DIRECTORY AND SHALL INCLUDE THE FOLLOWING CONSTRUCTION FEATURES:
   A. STUDS-WALL FRAMING MAY CONSIST OF EITHER WOOD STUDS OR STEEL CHANNEL STUDS. WOOD STUDS TO CONSIST OF NOM 2 BY 4 IN. LUMBER SPACED 16 IN. OC WITH NOM 2 BY 4 IN. LUMBER END PLATES AND CROSS BRACES. STEEL STUDS TO BE MIN 3-5/8 IN. WIDE BY 1-3/8 IN. DEEP CHANNELS SPACED MAX 24 IN. OC.
   B. WALLBOARD, GYPSUM*-NOM 5/8 IN. THICK, 4 FT WIDE WITH SQUARE OR TAPERED EDGES. THE GYPSUM WALLBOARD TYPE, THICKNESS, NUMBER OF LAYERS, FASTENER TYPE AND SHEET ORIENTATION SHALL BE AS SPECIFIED IN THE INDIVIDUAL U300 OR U400 SERIES DESIGN IN THE UL FIRE RESISTANCE DIRECTORY. MAX DIAM OF OPENING IS 14-1/2 IN FOR WOOD STUD WALLS AND 18 IN. FOR STEEL STUD WALLS.
   THE HOURLY F RATING OF THE FIRESTOP SYSTEM IS 1 HR WHEN INSTALLED IN A 1 HR FIRE RATED WALL AND 2 HR WHEN INSTALLED IN A 2 HR FIRE RATED WALL.

2. THROUGH PENETRANTS-ONE METALLIC PIPE OR TUBING TO BE CENTERED WITHIN THE FIRESTOP SYSTEM. PIPE OR TUBING TO BE RIGIDLY SUPPORTED ON BOTH SIDES OF WALL ASSEMBLY. THE FOLLOWING TYPES AND SIZES OF METALLIC PIPES OR TUBING MAY BE USED:
   A. STEEL PIPE-NOM 12 IN. DIAM (OR SMALLER) SCHEDULE 10 (OR HEAVIER) STEEL PIPE.
   B. COPPER TUBING-NOM 6 IN. DIAM (OR SMALLER) TYPE L (OR HEAVIER) COPPER TUBING.
   C. COPPER PIPE-NOM 6 IN. DIAM (OR SMALLER) REGULAR (OR HEAVIER) COPPER PIPE.

3. PIPE COVERING*-NOM 1 OR 2 IN. THICK HOLLOW CYLINDRICAL HEAVY DENSITY (MIN 3.5 PCF) GLASS FIBER UNITS JACKETED ON THE OUTSIDE WITH AN ALL SERVICE JACKET. LONGITUDINAL JOINTS SEALED WITH METAL FASTENERS OR FACTORY-APPLIED SELF-SEALING LAP TAPE. TRANSVERSE JOINTS SEALED WITH METAL FASTENERS OR WITH BUTT STRIP TAPE SUPPLIED WITH THE PRODUCT. WHEN NOM 1 IN. THICK PIPE COVERING IS USED, THE ANNULAR SPACE BETWEEN THE PIPE COVERING AND THE CIRCULAR CUTOUT IN THE GYPSUM WALLBOARD LAYERS ON EACH SIDE OF THE WALL SHALL BE MIN 1/4 IN. TO MAX 3/8 IN. WHEN NOM 2 IN. THICK PIPE COVERING IS USED, THE ANNULAR SPACE BETWEEN THE PIPE COVERING AND THE CIRCULAR CUTOUT IN THE GYPSUM WALLBOARD LAYERS ON EACH SIDE OF THE WALL SHALL BE MIN 1/2 IN. TO MAX 3/4 IN.
   SEE PIPE AND EQUIPMENT COVERING MATERIALS (BRGU) CATEGORY IN BUILDING MATERIALS DIRECTORY FOR NAMES OF MANUFACTURERS, ANY PIPE COVERING MATERIAL MEETING THE ABOVE SPECIFICATIONS AND BEARING THE UL CLASSIFICATION MARKING WITH A FLAME SPREAD INDEX OF 25 OR LESS AND A SMOKE DEVELOPED INDEX OF 50 OR LESS MAY BE USED.
   THE HOURLY T RATING OF THE FIRESTOP SYSTEM IS 3/4 HR WHEN NOM 1 IN. THICK PIPE COVERING IS USED. THE HOURLY T RATING OF THE FIRESTOP SYSTEM IS 1 HR AND 1-1/2 HR WHEN NOM 2 IN. THICK PIPE COVERING IS USED WITH 1 HR AND 2 HR FIRE RATED WALLS, RESPECTIVELY.

4. FIRESTOP SYSTEM-INSTALLED SYMMETRICALLY ON BOTH SIDES OF WALL ASSEMBLY. THE DETAILS OF THE FIRESTOP SYSTEM SHALL BE AS FOLLOWS:
   A. FILL, VOID OR CAVITY MATERIALS*-WRAP STRIP-NOM 1/4 IN. THICK INTUMESCENT ELASTOMERIC MATERIAL FACED ON ONE SIDE WITH ALUMINUM FOIL, SUPPLIED IN 2 IN. WIDE STRIPS. NOM 2 IN. WIDE STRIP TIGHTLY WRAPPED AROUND PIPE COVERING (FOIL SIDE OUT) WITH SEAM BUTTED. WRAP STRIP LAYER SECURELY BOUND WITH STEEL WIRE OR ALUMINUM FOIL TAPE AND SLID INTO ANNULAR SPACE APPROX 1-1/4 IN. SUCH THAT APPROX 3/4 IN. OF THE WRAP STRIP WIDTH PROTRUDES FROM THE WALL SURFACE. ONE LAYER OF WRAP STRIP IS REQUIRED WHEN NOM 1 IN. THICK PIPE COVERING IS USED. TWO LAYERS OF WRAP STRIP ARE REQUIRED WHEN NOM 2 IN. THICK PIPE COVERING IS USED.
   MINNESOTA MINING & MFG. CO.-FS-195+
   B. FILL, VOID OR CAVITY MATERIALS*-CAULK-MIN 1/4 IN. DIAM CONTINUOUS BEAD APPLIED TO THE WRAP STRIP/WALL INTERFACE AND TO THE EXPOSED EDGE OF THE WRAP STRIP LAYER APPROX 3/4 IN. FROM THE WALL SURFACE.
   MINNESOTA MINING & MFG. CO.-CP 25WB+
   *BEARING THE UL CLASSIFICATION MARKING

3 PENETRATION DETAIL

NO SCALE

IMEG
www.imegcorp.com
3221 BLUE RIDGE ROAD
SUITE 113
RALEIGH, NC 27612
P: 919.571.1111

IMEG RESERVES PROPRIETARY RIGHTS, INCLUDING COPYRIGHTS, TO THIS DRAWING AND THE DATA SHOWN THEREON. SAID DRAWING AND/OR DATA ARE THE EXCLUSIVE PROPERTY OF IMEG AND SHALL NOT BE USED OR REPRODUCED FOR ANY OTHER PROJECT WITHOUT THE EXPRESS WRITTEN APPROVAL AND PARTICIPATION OF IMEG.
©2026 IMEG CONSULTANTS CORP.

North Carolina Design Registration #F-1507

0 1 2 3
REF. SCALE IN INCHES

PROJECT #26001727.00

OAKLEY COLLIER ARCHITECTS
OCA
109 Candlewood Road, Rocky Mount, NC 27804 (P) 252.937.2500
205 W. Martin Street, Raleigh, NC 27601

RENOVATION FOR:
CRAVEN COUNTY GOVERNMENT CENTER EAST
CRAVEN COUNTY
1208 E. MAIN STREET, HAVELOCK, NORTH CAROLINA 28532

NORTH CAROLINA PROFESSIONAL CORPORATION
IMEG CORPORATION
No. F-1507

5/29/26
NORTH CAROLINA PROFESSIONAL SEAL 051195 ENGINEER
PATRICK J. MCCABE

GENERAL NOTE:
Prior to construction start, Contractor shall verify & be responsible for all Dimensions.

Revisions

#	Description	Date

Date	Project No.
05-28-26	26001727.00
Drawn By: PJM	Sheet No.
Checked By: GWD	M202

Sheet Title
HVAC DETAILS

Copyright © 2025 Oakley Collier Architects. These drawings are of the property of the Architect for use under his supervision. No reproduction or other use is allowed without permission.

SPLIT SYSTEM INDOOR UNIT SCHEDULE (SS)

NOTES:

1. PROVIDE WITH FUSIBLE DISCONNECT.
2. PROVIDE WITH SINGLE POINT ELETRICAL CONNECTION.
3. SEE OUTSIDE AIR SUMMARY FOR OUTSIDE AIR INTAKE FLOW SETTINGS.
4. ROUTE CONDENSATE TO EXTERIOR SPLASH BLOCK.
6. PROVIDE WITH LOW AMBIENT CONTROLS FOR OPERATION DOWN TO 0 DEGREES FAHRENHEIT.
7. PROVIDE WITH 2" PLEATED FILTER RACK AND FILTER AT UNIT.
8. EQUIPMENT UTILIZES 454B REFRIGERANT. THE CONTRACTOR SHALL BE RESPONSIBLE FOR INSTALLATION, COST, AND LABOR FOR ALL REFRIGERANT REQUIRED PER MANUFACTURE'S INSTALLATION INSTRUCTIONS AND ASHRAE 15 STANDARDS.

TAG NAME	CFM DESIGN	COOLING (MBH)	HEATING (MBH)	AUXILLARY HEAT KW	ELECTRICAL VOLTS	PH	FLA	MCA	MOCP	SEER2	HSPF	MANUFACTURER	MODEL	NOTES
SS-1	1,050	36	36	10.8	208	3	33.9	42	45	14.3	7.5	TRANE	5TEM4B04	1-8
SS-2	1,975	60	60	10.8	208	3	36	44	45	14.3	7.5	TRANE	5TEM4D07	1-8
SS-3	1,950	60	60	10.8	208	3	36	44	45	14.3	7.5	TRANE	5TEM4D07	1-8
SS-4	1,000	36	36	10.8	208	3	33.9	42	45	14.3	7.5	TRANE	5TEM4B04	1-8
SS-5	1,200	36	36	10.8	208	3	33.9	42	45	14.3	7.5	TRANE	5TEM4B04	1-8
SS-6	1,100	36	36	10.8	208	3	33.9	42	45	14.3	7.5	TRANE	5TEM4B04	1-8
SS-7	1,200	36	36	10.8	208	3	33.9	42	45	14.3	7.5	TRANE	5TEM4B04	1-8

CONDENSING UNIT SCHEDULE - COOLING (CU)

NOTES:
1. PROVIDE WITH FUSEIBLE DISCONNECT.

TAG NAME	TONS	ELECTRICAL VOLTS	PH	FLA	MINIMUM CIRCUIT AMPACITY	MAXIMUM OVERCURRENT PROTECTION	CURB / PAD TYPE / BY [G]	HEIGHT	MANUFACTURER	MODEL	NOTES
CU-1	3	208	3	13.4	16.6	25	PAD	4"	TRANE	5TWR4036	1
CU-2	5	208	3	18.8	22.8	35	PAD	4"	TRANE	5TWR4060	1
CU-3	5	208	3	18.8	22.8	35	PAD	4"	TRANE	5TWR4060	1
CU-4	3	208	3	13.4	16.6	25	PAD	4"	TRANE	5TWR4036	1
CU-5	3	208	3	13.4	16.6	25	PAD	4"	TRANE	5TWR4036	1
CU-6	3	208	3	13.4	16.6	25	PAD	4"	TRANE	5TWR4036	1
CU-7	3	208	3	13.4	16.6	25	PAD	4"	TRANE	5TWR4036	1

FAN SCHEDULE (EF, RF, SF, etc.)

NOTES:
1. PROVIDE WITH DISCONNECT SWITCH.
2. PROVIDE WITH BACKDRAFT DAMPER.
3. CONTROL VIA LIGHT SWITCH BY E.C.
4. CONTRIL VIA TIME CLOCK BY E.C.
5. CONTROL VIA THERMOSTAT.

TAG NAME	ARRANGEMENT	CFM DESIGN	TOTAL S.P. IN. WC	DRIVE	RPM	MOTOR MHP [E]	MANUFACTURER	MODEL	NOTES
EF-1	CABINET FAN	25	0.25	DIRECT	1500	0.2	COOK	GC-140	1-3
EF-1	CABINET FAN	25	0.25	DIRECT	1500	0.2	COOK	GC-140	1-3
EF-1	CABINET FAN	25	0.25	DIRECT	1500	0.2	COOK	GC-140	1-3
EF-2	INLINE	350	0.5	DIRECT	1500	0.2	COOK	100SQN12D	1,4
EF-3	CABINET FAN	110	0.25	DIRECT	1500	0.2	COOK	GC-140	1,2,5

AIR TERMINAL SCHEDULE (EG, RG, SD, etc.)

NOTES:
1. COORDINATE FINISH WITH ARCHITECT.

TAG NAME	TYPE	MATERIAL	FINISH	FACE SIZE WIDTH	HEIGHT	BORDER	MANUFACTURER	MODEL	NOTES
EG-1	LOUVERED	STEEL	WHITE	24"	24"	LAY-IN	PRICE	530	1
RG-1	LOUVERED	STEEL	WHITE	24"	24"	LAY-IN	PRICE	530	1
SD-1	LOUVERED	STEEL	WHITE	24"	24"	LAY-IN	PRICE	SCD 4 CONE	1

UNIT HEATER SCHEDULE - ELECTRIC (UH)

NOTES:
1. PROVIDE WITH POWER DISCONNECT.
2. PROVIDE WITH INTEGRAL THERMOSTAT.
3. PROVIDE WITH SURFACE MOUNTING KIT.

TAG NAME	LOCATION	CFM	Heating Capacity (BTUH)	AMPS	KW	VOLTAGE	PHASES	MANUFACTURER	MODEL	NOTES
UH-1	STAIRS	300	5,000	12.5	1.5	120	1	QMARK	CWH3150F	1-3
UH-2	STAIRS	300	5,000	12.5	1.5	120	1	QMARK	CWH3150F	1-3

DEHUMIDIFIER MANIFOLD SCHEDULE (DH)

NOTES:
1.PROVIDE WITH DISCONNECT SWITCH AND HARDWIRED CONNECTION. RECEPTACLE NOT ALLOWED ABOVE CEILING.
2.CONTROL VIA WALL MOUNTED HUMIDISTAT.
3.PROVIDE CONDENSATE TRAP AND ROUTE TO EXTERIOR SPLASH BLOCK.

TAG NAME	CFM	STATIC PRESSURE	WATTS	PINTS/DAY	VOLTAGE	PHASES	FULL LOAD AMPS	MAXIMUM OVERCURRENT PROTECTION	MANUFACTURER	MODEL	NOTES
DH-1	300	0.2	670	98	120	1	5.9	15	ULTRA-AIRE	98H	1-3
DH-2	300	0.2	670	98	120	1	5.9	15	ULTRA-AIRE	98H	1-3
DH-3	300	0.2	670	98	120	1	5.9	15	ULTRA-AIRE	98H	1-3

MINI-SPLIT SYSTEM SCHEDULE

NOTES:
1. PROVIDE FUSIBLE DISCONNECT ON OUTDOOR UNIT.
2. PROVIDE MOTOR RATED SWITCH FOR INDOOR UNIT.
3. PROVIDE WITH CONDENSATE PUMP AND ROUTE DISCHARGE TO EXTERIOR.
4. PROVIDE WITH WIRED THERMOSTAT.
5. PROVIDE WITH LOW AMBIENT CONTROLS DOWN TO 0°F.

TAG NAME	MANUFACTOR	INDOOR MODEL	CFM DESIGN	ELECTRICAL FLA	TAG NAME	OUTDOOR MODEL	COOLING (MBH)	ELECTRICAL VOLTS	PH	MCA	MOCP	SEER2	NOTES
FC-8	MITSUBISHI	PKA-A24KA8	800	0.3	CU-8	PUY-A24NHA7	24	208	1	19	25	21.3	1-5

IMEG
www.imegcorp.com
3221 BLUE RIDGE ROAD
SUITE 113
RALEIGH, NC 27612
P: 919.571.1111

IMEG RESERVES PROPRIETARY RIGHTS, INCLUDING COPYRIGHTS, TO THIS DRAWING AND THE DATA SHOWN THEREON. SAID DRAWING AND/OR DATA ARE THE EXCLUSIVE PROPERTY OF IMEG AND SHALL NOT BE USED OR REPRODUCED FOR ANY OTHER PROJECT WITHOUT THE EXPRESS WRITTEN APPROVAL AND PARTICIPATION OF IMEG.
©2026 IMEG CONSULTANTS CORP.

North Carolina Design Registration #F-1507

0 1 2 3

REF. SCALE IN INCHES

PROJECT #26001727.00

OAKLEY COLLIER ARCHITECTS
OCA
109 Candlewood Road, Rocky Mount, NC 27804 (P) 252.937.2500
205 W. Martin Street, Raleigh, NC 27601

RENOVATION FOR:

CRAVEN COUNTY GOVERNMENT CENTER EAST

CRAVEN COUNTY
1208 E. MAIN STREET, HAVELOCK, NORTH CAROLINA 28532

NORTH CAROLINA PROFESSIONAL CORPORATION IMEG CORPORATION No. F-1507

5/29/26

NORTH CAROLINA PROFESSIONAL SEAL 051195 ENGINEER PATRICK J. MCCABE

GENERAL NOTE:
Prior to construction start. Contractor shall verify & be responsible for all Dimensions.

Revisions

#	Description	Date

Date	Project No.
05-28-26	26001727.00

Drawn By	Sheet No.
PJM	M301
Checked By: GWD	

Sheet Title
HVAC SCHEDULES

Copyright © 2025 Oakley Collier Architects. These drawings are of the property of the Architect for use under his supervision. No reproduction or other use is allowed without permission.

VIEW KEY

NAME — LEVEL NAME
10'-0" — HEIGHT ABOVE PROJECT 0'-0"

(1) — KEYNOTE: INDICATES NOTE USED TO DESCRIBE ADDITIONAL INFORMATION ABOUT WORK REQUIRED, SPECIFIC TO THE SHEET AND/OR DETAIL

INDICATES DIRECTION OF TRUE NORTH
PLAN OR DETAIL NUMBER
PLAN OR DETAIL NAME
NORTH
1
VIEW NAME
1/8" = 1'-0"
PLAN OR DETAIL SCALE

INDICATES SIMILAR DETAIL REFERENCED IN MULTIPLE LOCATIONS
SIM
DETAIL REFERRED TO BY SECTION CUT
M101 — SHEET DETAIL IS LOCATED ON — T101

LINE TYPE AND TAG KEY:

NEW WORK BY THIS CONTRACTOR (WIDE LINE)
NEW
EXISTING TO BE REMOVED (SHORT DASHED PATTERN)
NEW UNDERFLOOR OR UNDERGROUND (LONG DASHED PATTERN)

EXISTING TO REMAIN OR WORK BY OTHERS (NARROW LINE)
EXISTING
EXISTING TO BE REMOVED BY OTHERS (SHORT DASHED PATTERN)
EXISTING UNDERFLOOR OR UNDERGROUND (LONG DASHED PATTERN)

HALFTONING DOES NOT MODIFY SCOPE.

'TAG'-E — TAGS WITH DASH 'E' INDICATES THE REFERENCED OBJECT IS EXISTING

TAG-1 — UNDERLINED TAG INDICATES OBJECT IS IN-SCOPE. IF NEW, ADDITIONAL INFORMATION IS AVAILABLE IN A SCHEDULE, MATERIAL LIST, OR SYMBOL LIST

INDICATES AN EXISTING SYSTEM'S POINT OF CONNECTION/REMOVAL

ELECTRICAL SYMBOL LIST - RECEPTACLES

SYMBOL	TAG	EQUIP ABBREV	SPEC SECTION	DESCRIPTION
#		REC-DUP	26 27 26	DUPLEX RECEPTACLE, 125V
	W	REC-DUP-W	26 27 26	DUPLEX GFI WEATHERPROOF RECEPTACLE, 125V - NEMA 3R WHILE IN-USE COVER
		REC-DUP-GFI	26 27 26	DUPLEX RECEPTACLE, GROUND FAULT CIRCUIT INTERRUPTER, 125V
#		REC-QUAD	26 27 26	QUAD RECEPTACLE, 125V
#	520	REC-SIM-520R	26 27 26	RECEPTACLE, 5-20R, 125V
		FB-#	26 27 26	ELECTRICAL FLOOR BOX
		PT-#	26 27 26	ELECTRICAL POKE THROUGH

RECEPTACLE SUBSCRIPT KEY:

DEVICE KEY:

DEVICE — # = MOUNTING (IF APPLICABLE)
1 = CIRCUIT NUMBER

*IF LABEL IS ORIENTED HORIZONTALLY A SLASH WILL SEPARATE THIS INFORMATION. EX: A / 1

ELECTRICAL MOUNTING SUBSCRIPT KEY:
A — MOUNT AT +6" TO CENTERLINE ABOVE COUNTER OR BACKSPLASH
C — MOUNT AT CEILING (DEVICE OR ROUGH-IN CONTEXT)
L — MOUNT IN CASEWORK
+#" — MOUNT AT #" TO CENTERLINE ABOVE FINISHED FLOOR

ELECTRICAL SYMBOL LIST - POWER

SYMBOL	EQUIP ABBREV	SPEC SECTION	DESCRIPTION
E	ECONN	26 05 33	ELECTRICAL CONNECTION - CEILING/SURFACE
E	ECONN	26 05 33	ELECTRICAL CONNECTION - WALL
	CT	26 24 16	PANELBOARD - SURFACE MOUNT
	PANEL-'##'	26 24 16	PANELBOARD - SURFACE MOUNT
	MTS-#	26 36 00	AUTOMATIC TRANSFER SWITCH, REFER TO TRANSFER SWITCH SCHEDULE
	FDS-#	26 28 16	FUSIBLE DISCONNECT SWITCH, REFER TO DISCONNECT AND STARTER SCHEDULE
M	KWM	26 09 13	ELECTRIC METER

TECHNOLOGY SYMBOL LIST

SYMBOL	TAG	EQUIPMENT LIST ABBREVIATION	DESCRIPTION
C#	C1	SC-IO-W	INFORMATION OUTLET (WALL)
CR			SECURITY ACCESS: KEYCARD READER
			TIME CLOCK

2018 APPENDIX B BUILDING CODE SUMMARY FOR COMMERCIAL PROJECTS ELECTRICAL SUMMARY

ELECTRICAL SYSTEMS AND EQUIPMENT

METHOD OF COMPLIANCE: Energy Code: ☒ Prescriptive ☐ Performance
ASHRAE 90.1: ☐ Prescriptive ☐ Performance

LIGHTING SCHEDULE

LAMP TYPE REQUIRED IN FIXTURE: SEE FIXTURE SCHEDULE
NUMBER OF LAMPS IN THE FIXTURE: SEE FIXTURE SCHEDULE
BALLAST TYPE USED IN THE FIXTURE: SEE FIXTURE SCHEDULE
NUMBER OF BALLASTS IN THE FIXTURE: SEE FIXTURE SCHEDULE
TOTAL WATTAGE PER FIXTURE: SEE FIXTURE SCHEDULE

TOTAL INTERIOR WATTAGE: 5755 VS 9187
SPECIFIED VS. ALLOWED (WHOLE BUILDING OR SPACE BY SPACE)

TOTAL EXTERIOR WATTAGE: 564 VS 750
SPECIFIED VS. ALLOWED

ADDITIONAL EFFICIENCY PACKAGE OPTIONS
(WHEN USING THE 2018 NCECC; NOT REQUIRED FOR ASHRAE 90.1)

- ☐ C406.2 MORE EFFICIENT HVAC EQUIPMENT PERFORMANCE
- ☒ C406.3 REDUCED LIGHTING POWER DENSITY
- ☐ C406.4 ENHANCED DIGITAL LIGHTING CONTROLS
- ☐ C406.5 ON-SITE RENEWABLE ENERGY
- ☐ C406.6 DEDICATED OUTDOOR AIR SYSTEM
- ☐ C406.7 REDUCED ENERGY USE IN SERVICE WATER HEATING

DESIGNER STATEMENT:
TO THE BEST OF MY KNOWLEDGE AND BELIEF, THE DESIGN OF THIS BUILDING COMPLIES WITH THE ELECTRICAL SYSTEM AND EQUIPMENT REQUIREMENTS OF THE NORTH CAROLINA STATE BUILDING CODE, 2018 - ENERGY.

SIGNED: Alex Bowling
NAME: ALEX BOWLING P.E.
TITLE: ENGINEER

ELECTRICAL INSTALLATION NOTES:

1. CIRCUIT NUMBERS ARE SHOWN FOR CIRCUIT IDENTIFICATION. CIRCUITING SHALL AGREE WITH NUMBERING ON THE PANEL PROVIDED. COMMON NEUTRALS MAY NOT BE USED FOR BRANCH CIRCUITS. BALANCE THE LOAD ON PANEL AS EVENLY AS POSSIBLE BETWEEN EACH PHASE.
2. FLUSH MOUNT ALL LIGHTING CONTROL DEVICES AT +42" FROM FLOOR (CENTERLINE DIMENSION), EXCEPT WHERE OTHERWISE NOTED.
3. FLUSH MOUNT ALL DUPLEX RECEPTACLES AND TECHNOLOGY OUTLETS AT +18" FROM FLOOR (CENTERLINE DIMENSION), EXCEPT WHERE OTHERWISE NOTED. RECEPTACLES AND OUTLETS MAY BE SURFACE MOUNTED WHEN CONDUIT IS SPECIFIED EXPOSED. MOUNT EXTERIOR LOCATED RECEPTACLES WITH WHILE-IN-USE COVERS AT +20" FROM FINISHED GRADE (CENTER DIMENSIONS) TO MAINTAIN INSTALLATION ADA COMPLIANCE.
4. ALL MATERIALS USED TO SEAL PENETRATIONS OF FIRE RATED WALLS AND FLOORS SHALL BE TESTED AND CERTIFIED AS A SYSTEM PER ASTM E814 STANDARDS FOR FIRE TESTS OF THROUGH-PENETRATION FIRESTOPS. REFER TO 27 05 03 AND 28 05 03 DIVISION 7 26 05 03 FOR ADDITIONAL INFORMATION AND REQUIREMENTS SPECIFIC TO FIRESTOPPING.
5. CONNECTION FOR ELECTRIC WATER COOLERS (EWC) SHALL BE A JUNCTION BOX CONCEALED BEHIND WATER COOLER ACCESS PLATE OR BE A GFI RECEPTACLE LOCATED DIRECTLY BELOW AND CENTERED ON EWC. CONTRACTOR SHALL VERIFY TYPE OF EWC TO BE INSTALLED.
6. CONTRACTOR SHALL COORDINATE THE LOCATION OF ALL CEILING MOUNTED DEVICES AND EQUIPMENT WITH LUMINAIRES, SPRINKLER, AND CEILING DIFFUSERS. CENTER ALL DEVICES IN CEILING TILE PATTERN. SMOKE DETECTORS,CARBON MONOXIDE DETECTORS, AND OCCUPANCY/VACANCY SENSORS SHALL BE LOCATED NO CLOSER THAN 3 FEET TO AN AIR SUPPLY DIFFUSER OR RETURN GRILLE. CARBON MONOXIDE DETECTORS SHALL BE LOCATED 10 PLUS FT FROM FIRE PLACES, COOKING, AND SIMILAR FUEL-BURNING APPLIANCES.
7. CONTRACTOR SHALL VERIFY ALL FURNITURE, MODULAR FURNITURE, AND EQUIPMENT LOCATIONS WITH ARCHITECTURAL PLANS, ELEVATIONS, AND REVIEWED SHOP DRAWINGS. PRIOR TO MAKING THE ACTUAL ELECTRICAL INSTALLATION, THIS CONTRACTOR SHALL ADJUST RECEPTACLES, OUTLETS, OR CONNECTION LOCATIONS TO ACCOMMODATE FURNITURE AND/OR EQUIPMENT.
8. ELECTRICAL AND TECHNOLOGY EQUIPMENT SHALL BE MOUNTED TO AVOID IMPEDANCE OF, OPERATION OF, AND/OR ACCESS TO ELECTRICAL AND MECHANICAL EQUIPMENT. ALL MOUNTING OF ELECTRICAL AND TELECOMMUNICATIONS EQUIPMENT, ON EQUIPMENT SUPPLIED BY ANOTHER CONTRACTOR, SHALL BE APPROVED IN ADVANCE BY THE OTHER CONTRACTOR.
9. CONTRACTOR SHALL BE RESPONSIBLE FOR ALL OPENINGS REQUIRED IN WALLS. ALL OPENINGS SHALL BE REPAIRED TO MATCH EXISTING BY A QUALIFIED CONTRACTOR AT THE EXPENSE OF THIS CONTRACTOR. ALL CONDUITS THROUGH WALLS SHALL BE GROUTED OR SEALED INTO OPENINGS.
10. EACH CONTRACTOR IS RESPONSIBLE FOR DAMAGE CAUSED BY THEIR ACTIONS TO THE WALLS, FLOORS, CEILINGS, AND ROOFS. THE CONTRACTOR WHOSE WORK CAUSES DAMAGE IS RESPONSIBLE FOR PATCHING TO MATCH ORIGINAL CONSTRUCTION, FIRE RATING, AND FINISH.
11. REFER TO ARCHITECTURAL REFLECTED CEILING PLAN, ELECTRICAL, TECHNOLOGY AUDIO/VISUAL, AND OTHER ELECTRICAL PLANS FOR EXACT LOCATIONS OF ALL CEILING MOUNTED DEVICES, OTHER THAN SPRINKLERS.
12. ELECTRICAL IDENTIFICATION. REFER TO SPECIFICATION SECTION 26 05 53 FOR COLOR/LABEL REQUIREMENTS FOR CONDUIT, BOX, CABLE/WIRE, AND EQUIPMENT.
13. PROVIDE SEPARATE BRANCH CIRCUIT TO SUPPLY POWER TO THE HOIST WAY PIT LIGHTING. LIGHTING SHALL NOT BE CONNECTED TO LOAD SIDE OF GFI DEVICE. REFER TO ELEVATOR MANUFACTURER FOR EXACT LOCATION.
14. COORDINATE ALL LUMINAIRE LOCATIONS WITH STRUCTURAL TRUSS AND BEAMS PRIOR TO ROUGH-IN.
15. WHERE LUMINAIRE QUANTITIES OR LAYOUT DIFFER BETWEEN ELECTRICAL AND ARCHITECTURAL PLANS, HIGHER QUANTITY SHALL TAKE PRECEDENCE. CONTRACTOR TO CONFIRM QUANTITY AND LAYOUT WITH DESIGN TEAM.

APPLICABLE CODES

CONTRACTOR SHALL COMPLY WITH APPLICABLE CODES AND LOCAL AMENDMENTS INCLUDING, BUT NOT LIMITED TO, THE FOLLOWING:

ELECTRICAL CODE:	NEC 2020
ENERGY CONSERVATION CODE:	NCECC 2018

ELECTRICAL SHEET INDEX

E000	ELECTRICAL COVERSHEET
E201	FIRST FLOOR PLAN - LIGHTING
E202	SECOND FLOOR PLAN - LIGHTING
E211	FIRST FLOOR PLAN - POWER
E212	SECOND FLOOR PLAN - POWER
E400	ELECTRICAL DETAILS
E600	ELECTRICAL SCHEDULES
E601	ELECTRICAL SCHEDULES
GRAND TOTAL: 8	

IMEG
3221 BLUE RIDGE ROAD
SUITE 113
RALEIGH, NC 27612
P: 919.571.1111
www.imegcorp.com

IMEG RESERVES PROPRIETARY RIGHTS, INCLUDING COPYRIGHTS, TO THIS DRAWING AND THE DATA SHOWN THEREON. SAID DRAWING AND/OR DATA ARE THE EXCLUSIVE PROPERTY OF IMEG AND SHALL NOT BE USED OR REPRODUCED FOR ANY OTHER PROJECT WITHOUT THE EXPRESS WRITTEN APPROVAL AND PARTICIPATION OF IMEG.
©2026 IMEG CONSULTANTS CORP.
North Carolina Design Registration #F-1507

0 1 2 3
REF. SCALE IN INCHES — PROJECT #26001727.00

OAKLEY COLLIER ARCHITECTS
OCA
109 Candlewood Road, Rocky Mount, NC 27804 (P) 252.937.2500
205 W. Martin Street, Raleigh, NC 27601

RENOVATION FOR:
CRAVEN COUNTY GOVERNMENT CENTER EAST
CRAVEN COUNTY
1208 E. MAIN STREET, HAVELOCK, NORTH CAROLINA 28532

NORTH CAROLINA PROFESSIONAL CORPORATION
IMEG CORPORATION No. F-1507

Alex Bowling
NORTH CAROLINA PROFESSIONAL SEAL 058287 ENGINEER ALEX R. BOWLING
5/29/2026

GENERAL NOTE:
Prior to construction start. Contractor shall verify & be responsible for all Dimensions.

Revisions

#	Description	Date

Date: 05-28-26	Project No.: 26001727.00
Drawn By: Author	Sheet No.: E000
Checked By: Checker	

Sheet Title
ELECTRICAL COVERSHEET

Copyright © 2025 Oakley Collier Architects. These drawings are of the property of the Architect for use under his supervision. No reproduction or other use is allowed without permission.

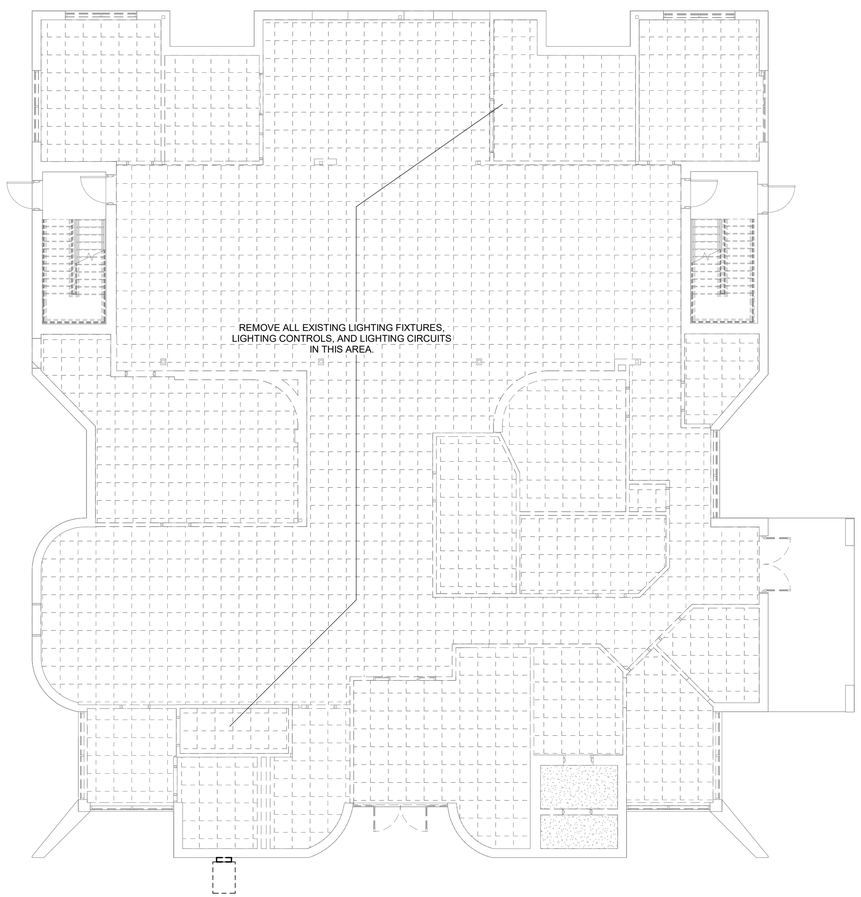

1 FIRST FLOOR DEMOLITION PLAN - LIGHTING

1/8" = 1'-0"

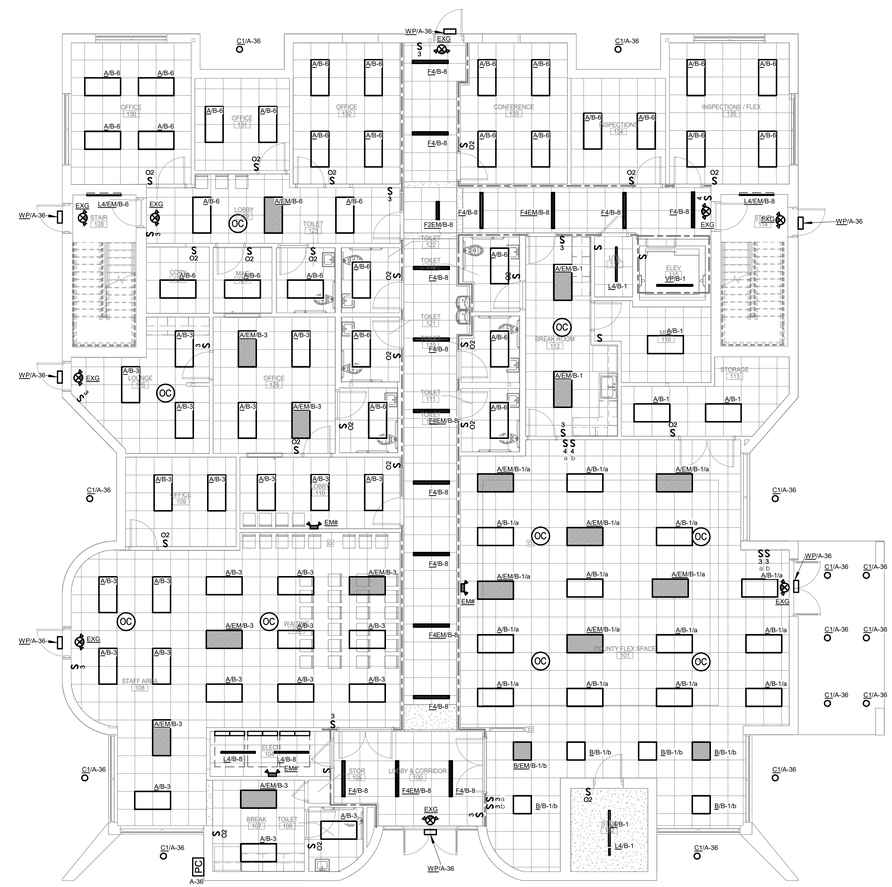

2 FIRST FLOOR PLAN - LIGHTING

1/8" = 1'-0"

OAKLEY COLLIER ARCHITECTS
109 Candlewood Road, Rocky Mount, NC 27804 (P) 252.937.2500
205 W. Martin Street, Raleigh, NC 27601

RENOVATION FOR:
CRAVEN COUNTY GOVERNMENT CENTER EAST
CRAVEN COUNTY
1208 E. MAIN STREET, HAVELOCK, NORTH CAROLINA 28532

NORTH CAROLINA PROFESSIONAL CORPORATE SEAL — IMEG CORPORATION No. F-1507

NORTH CAROLINA PROFESSIONAL SEAL 058287 ENGINEER ALEX R. BOWLING

5/29/2026

GENERAL NOTE:
Prior to construction start. Contractor shall verify & be responsible for all Dimensions.

Revisions

#	Description	Date

Date	Project No.
05-28-26	26001727.00
Drawn By: Author	Sheet No. E201
Checked By: Checker	

Sheet Title: FIRST FLOOR PLAN - LIGHTING

IMEG
3221 BLUE RIDGE ROAD
SUITE 113
RALEIGH, NC 27612
P: 919.571.1111
www.imegcorp.com

IMEG RESERVES PROPRIETARY RIGHTS, INCLUDING COPYRIGHTS, TO THIS DRAWING AND THE DATA SHOWN THEREON. SAID DRAWING AND/OR DATA ARE THE EXCLUSIVE PROPERTY OF IMEG AND SHALL NOT BE USED OR REPRODUCED FOR ANY OTHER PROJECT WITHOUT THE EXPRESS WRITTEN APPROVAL AND PARTICIPATION OF IMEG.
©2026 IMEG CONSULTANTS CORP.

North Carolina Design Registration #F-1507

0 1 2 3
REF. SCALE IN INCHES

PROJECT #26001727.00

Copyright © 2025 Oakley Collier Architects. These drawings are of the property of the Architect for use under his supervision. No reproduction or other use is allowed without permission.

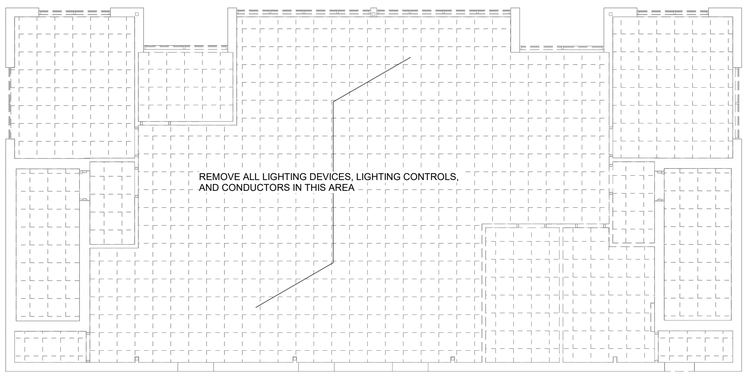

1 SECOND FLOOR DEMOLITION PLAN - LIGHTING

1/8" = 1'-0"

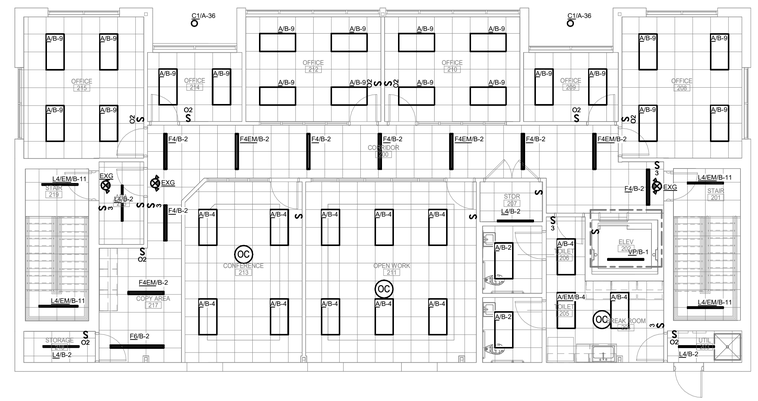

NORTH

2 SECOND FLOOR PLAN - LIGHTING

1/8" = 1'-0"

OAKLEY COLLIER ARCHITECTS
109 Candlewood Road, Rocky Mount, NC 27804 (P) 252.937.2500
205 W. Martin Street, Raleigh, NC 27601

RENOVATION FOR:
CRAVEN COUNTY GOVERNMENT CENTER EAST
CRAVEN COUNTY
1208 E. MAIN STREET, HAVELOCK, NORTH CAROLINA 28532

NORTH CAROLINA PROFESSIONAL CORPORATION
IMEG CORPORATION No. F-1507

NORTH CAROLINA PROFESSIONAL SEAL 058287 ENGINEER ALEX R. BOWLING

5/29/2026

GENERAL NOTE:
Prior to construction start. Contractor shall verify & be responsible for all Dimensions.

Revisions

#	Description	Date

Date	Project No.
05-28-26	26001727.00
Drawn By: Author	Sheet No.
Checked By: Checker	E202

Sheet Title: SECOND FLOOR PLAN - LIGHTING

IMEG
www.imegcorp.com
3221 BLUE RIDGE ROAD
SUITE 113
RALEIGH, NC 27612
P: 919.571.1111

IMEG RESERVES PROPRIETARY RIGHTS, INCLUDING COPYRIGHTS, TO THIS DRAWING AND THE DATA SHOWN THEREON. SAID DRAWING AND/OR DATA ARE THE EXCLUSIVE PROPERTY OF IMEG AND SHALL NOT BE USED OR REPRODUCED FOR ANY OTHER PROJECT WITHOUT THE EXPRESS WRITTEN APPROVAL AND PARTICIPATION OF IMEG.
©2026 IMEG CONSULTANTS CORP.
North Carolina Design Registration #F-1507

0 1 2 3
REF. SCALE IN INCHES
PROJECT #26001727.00

Copyright © 2025 Oakley Collier Architects. These drawings are of the property of the Architect for use under his supervision. No reproduction or other use is allowed without permission.

KEYNOTES:

1. PROVIDE 2-2" EMPTY CONDUITS TO PROPERTY LINE PER TELEPHONE COMPANY. PROVIDE WITH PULLWIRE. PROVIDE GROUND BAR AND 1-# 6 CU IN 1/2" CONDUIT TO PANEL. MOUNT RECEPTACLE ON BOARD TO ACCOMODATE EQUIPMENT.
2. PROVIDE 1-1" CONDUIT WITH PULL WIRE FOR FUTURE SITE LIGHTING COORDINATION. FIELD COORDINATE EXACT LOCATION AND ROUTING.
3. FIELD COORDINATE WEATHERPROOF GFPE PROTECTED DUPLEX RECEPTACLE WITH LOCATION OF HOT BOX.
4. FIELD COORDINATE EXACT LOCATION AND CONNECTION OF SITE SIGN.
5. SEE FAN SCHEDULE; M301.
6. INDOOR UNIT POWERED VIA OUTDOOR UNIT CU-8; SEE M301.

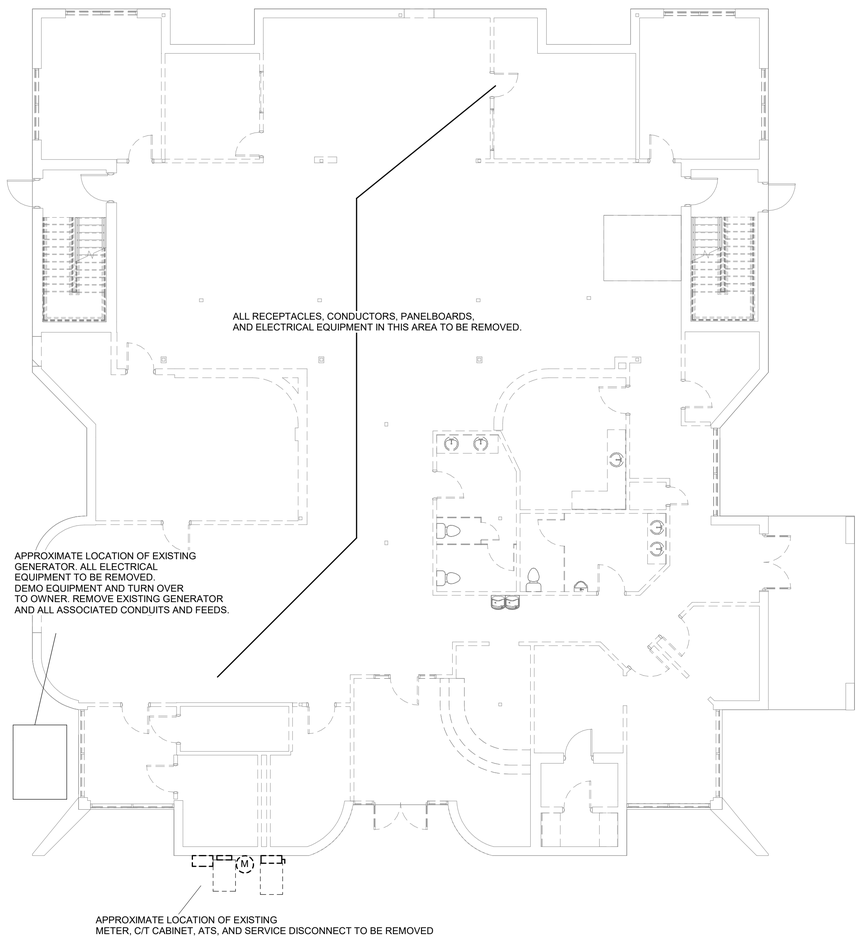

2 FIRST FLOOR DEMOLITION PLAN - POWER

1/8" = 1'-0"

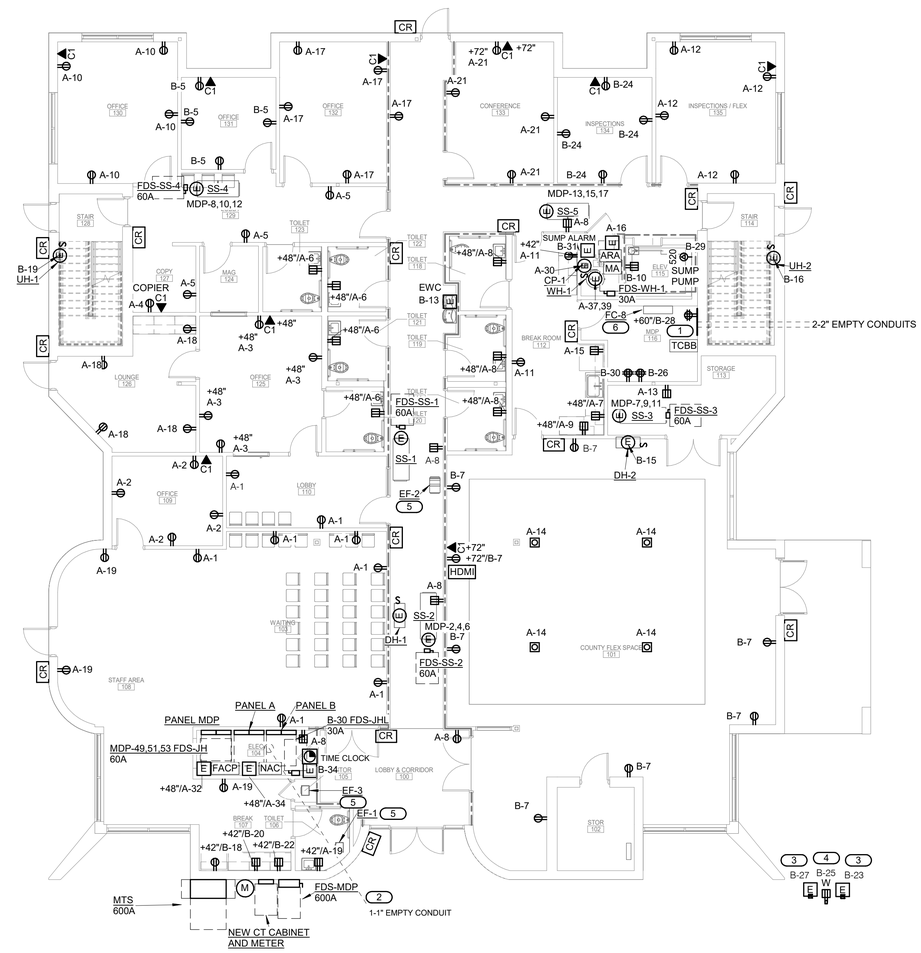

1 FIRST FLOOR PLAN - POWER

1/8" = 1'-0"

OAKLEY COLLIER ARCHITECTS
OCA
109 Candlewood Road, Rocky Mount, NC 27804 (P) 252.937.2500
205 W. Martin Street, Raleigh, NC 27601

RENOVATION FOR:
CRAVEN COUNTY GOVERNMENT CENTER EAST
CRAVEN COUNTY
1208 E. MAIN STREET, HAVELOCK, NORTH CAROLINA 28532

NORTH CAROLINA PROFESSIONAL CORPORATION IMEG CORPORATION No. F-1507

NORTH CAROLINA PROFESSIONAL SEAL 058287 ENGINEER ALEX R. BOWLING
5/29/2026

GENERAL NOTE:
Prior to construction start. Contractor shall verify & be responsible for all Dimensions.

Revisions

#	Description	Date

Date	Project No.
05-28-26	26001727.00
Drawn By: Author	Sheet No. E211
Checked By: Checker	

Sheet Title: FIRST FLOOR PLAN - POWER

IMEG
www.imegcorp.com
3221 BLUE RIDGE ROAD
SUITE 113
RALEIGH, NC 27612
P: 919.571.1111

IMEG RESERVES PROPRIETARY RIGHTS, INCLUDING COPYRIGHTS, TO THIS DRAWING AND THE DATA SHOWN THEREON. SAID DRAWING AND/OR DATA ARE THE EXCLUSIVE PROPERTY OF IMEG AND SHALL NOT BE USED OR REPRODUCED FOR ANY OTHER PROJECT WITHOUT THE EXPRESS WRITTEN APPROVAL AND PARTICIPATION OF IMEG.
©2026 IMEG CONSULTANTS CORP.

North Carolina Design Registration #F-1507

0 1 2 3
REF. SCALE IN INCHES
PROJECT #26001727.00

Copyright © 2025 Oakley Collier Architects. These drawings are of the property of the Architect for use under his supervision. No reproduction or other use is allowed without permission.

KEYNOTES:

1. DISCONNECT LOCATED IN TOP OF ELEVATOR HOISTWAY. COORDINATE WITH ELEVATOR VENDOR.
   - CONNECT VIA DISCONNECT IN ELECTRICAL ROOM. SEE FIRST FLOOR POWER PLAN 2/E211.
   - SEE ELEVATOR SUBMITTALS FOR COORDINATION PRIOR TO ROUGH-IN.
   - PROVIDE LIGHT FIXTURE 'L2' (VAPORTIGHT) IN TOP OF HOISTWAY. SEE SECOND FLOOR LIGHTING PLAN 2/E202.
   - PROVIDE AUXILLARY DRY CONTACT ON DISCONNECT AND CONTROL WIRING ON DISCONNECT PER ELEVATOR SHOP DRAWINGS.
2. VERIFY ELEVATOR MACHINE SPACE LOCATION WITH ELEVATOR SHOP DRAWINGS. DISCONNECT SHALL BE FUSED AT 60A WITH DUAL ELEMENT CURRENT LIMITING FUSES.
3. SEE FAN SCHEDULE; M301

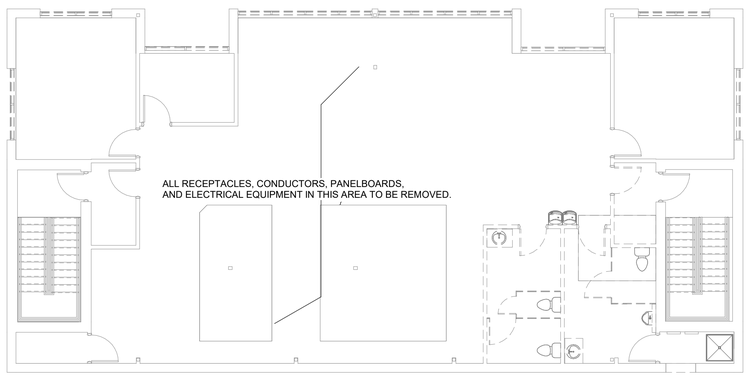

2 SECOND FLOOR DEMOLITION PLAN - POWER

1/8" = 1'-0"

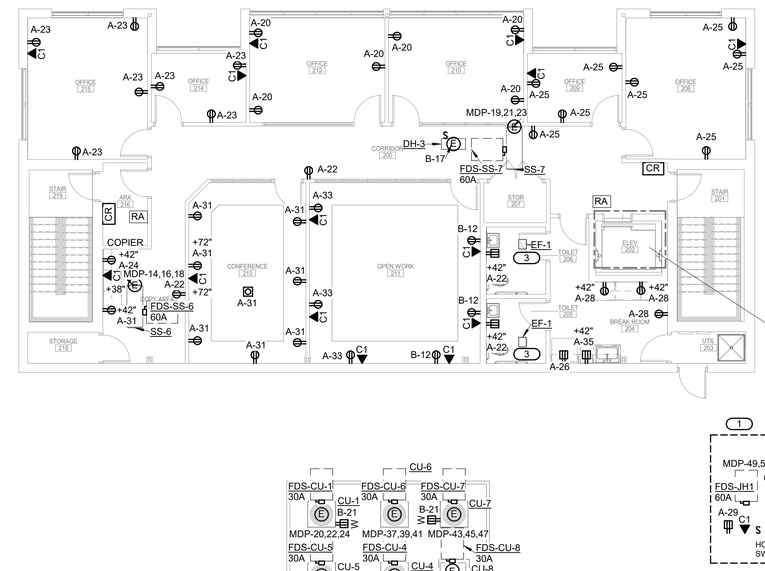

1 SECOND FLOOR PLAN - POWER

1/8" = 1'-0"

IMEG
www.imegcorp.com
3221 BLUE RIDGE ROAD
SUITE 113
RALEIGH, NC 27612
P: 919.571.1111

IMEG RESERVES PROPRIETARY RIGHTS, INCLUDING COPYRIGHTS, TO THIS DRAWING AND THE DATA SHOWN THEREON. SAID DRAWING AND/OR DATA ARE THE EXCLUSIVE PROPERTY OF IMEG AND SHALL NOT BE USED OR REPRODUCED FOR ANY OTHER PROJECT WITHOUT THE EXPRESS WRITTEN APPROVAL AND PARTICIPATION OF IMEG.
©2026 IMEG CONSULTANTS CORP.

North Carolina Design Registration #F-1507

0 1 2 3
REF. SCALE IN INCHES

PROJECT #26001727.00

OAKLEY COLLIER ARCHITECTS
OCA
109 Candlewood Road, Rocky Mount, NC 27804 (P) 252.937.2500
205 W. Martin Street, Raleigh, NC 27601

RENOVATION FOR:
CRAVEN COUNTY GOVERNMENT CENTER EAST
CRAVEN COUNTY
1208 E. MAIN STREET, HAVELOCK, NORTH CAROLINA 28532

NORTH CAROLINA PROFESSIONAL CORPORATION
IMEG CORPORATION
No. F-1507

NORTH CAROLINA PROFESSIONAL
SEAL
058287
ENGINEER
ALEX R. BOWLING

5/29/2026

GENERAL NOTE:
Prior to construction start. Contractor shall verify & be responsible for all Dimensions.

Revisions

#	Description	Date

Date	Project No.
05-28-26	26001727.00
Drawn By: Author	Sheet No.
Checked By: Checker	E212

Sheet Title
SECOND FLOOR PLAN - POWER

Copyright © 2025 Oakley Collier Architects. These drawings are of the property of the Architect for use under his supervision. No reproduction or other use is allowed without permission.

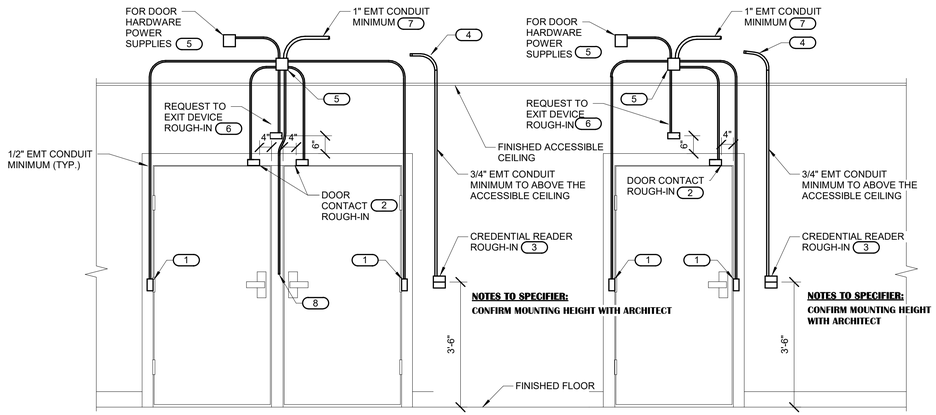

DOOR FRAME ROUGH-IN DIAGRAM
(ALL DOUBLE DOORS WITH OR WITHOUT MULLION)

DOOR FRAME ROUGH-IN DIAGRAM
(ALL SINGLE DOORS)

NOTES:

1. CONFIGURATIONS SHOWN IN THE DETAIL ABOVE ARE DIAGRAMMATIC, INTENDED TO DESCRIBE THE ACCESS CONTROL DOOR ROUGH-IN REQUIREMENTS OF THE DOORS. DETAILS ABOVE MAY NOT ACCURATELY REPRESENT DOOR SIZE, DOOR SWING, DOOR HARDWARE, OR DOOR FUNCTIONALITY. REFER TO ARCHITECTURAL DOOR HARDWARE SCHEDULE, DOOR HARDWARE GROUPS AND DOOR HARDWARE SPECIFICATIONS FOR COMPLETE INFORMATION. MIRROR THE DETAIL AS REQUIRED.
2. ROUGH-IN SHOWN IN THE DETAIL ABOVE REPRESENTS THE MINIMUM REQUIREMENTS FOR ALL ACCESS CONTROL SYSTEM DEVICES AND CABLING UNLESS OTHERWISE NOTED. COORDINATE EXACT REQUIREMENTS WITH SELECTED DOOR MATERIALS, DOOR HARDWARE, AND ACCESS CONTROL DEVICES AND CABLING PRIOR TO INSTALLATION.
3. ALL CABLING IN WALLS AND WHERE EXPOSED ON VERTICAL SURFACES SHALL BE INSTALLED IN EMT CONDUIT OR SURFACE MOUNT RACEWAY. CABLING ROUTED HORIZONTALLY ABOVE THE ACCESSIBLE CEILING MAY BE INSTALLED FREE-AIR CABLING PROPERLY RATED FOR THE CEILING ENVIRONMENT.
4. THE ELECTRICAL OR SECURITY NOT MODIFY ANY FIRE RATED DOOR AND/OR DOOR FRAME. REFER TO THE ARCHITECTURAL DOOR SCHEDULE, DOOR HARDWARE SCHEDULE, AND DOOR HARDWARE SPECIFICATION FOR ADDITIONAL INFORMATION. MODIFICATION TO ANY FIRE RATED DOOR AND/OR FRAME WILL REQUIRE A RE-CERTIFICATION OF THE DOOR AND FRAME WITH THE LOCAL AUTHORITY HAVING JURISDICTION (AHJ).
5. FURNISH AND INSTALL FIRESTOP MATERIALS FOR ALL ACCESS CONTROL DOOR ROUGH-INS PER PROJECT REQUIREMENTS. REFER TO SPECIFICATIONS FOR ADDITIONAL INFORMATION AND REQUIREMENTS.
6. REFER TO THE ACCESS CONTROL RISER DIAGRAM FOR CABLING REQUIREMENTS AND THE ACCESS CONTROL DOOR TYPE SCHEDULE FOR ADDITIONAL INFORMATION.
7. INSTALLATION SHALL INCLUDE ALL POWER REQUIRED FOR SYSTEM OPERATION INCLUDING +120VAC. REFER TO THE SUGGESTED MATRIX OF SCOPE RESPONSIBILITY FOR ADDITIONAL INFORMATION.

KEYNOTES:

1. PROVIDE JUNCTION BOXES IN THE DOOR FRAME WHERE SHOWN ON THIS DETAIL. ROUGH-IN SHALL BE PROVIDED WHETHER THE CURRENT SECURITY SCHEME UTILIZES THEM OR NOT. ALL CONDUITS SHALL BE EMT CONDUIT UNLESS OTHERWISE NOTED. FLEXIBLE CONDUIT OF ANY TYPE WILL NOT BE ACCEPTED. COORDINATE INSTALLATION WITH ON-SITE DOOR FRAME INSTALLATION CONTRACTOR.
2. ALL DOOR POSITION SWITCHES ARE REQUIRED TO BE RECESSED UNLESS OTHERWISE NOTED. ELECTRIC HINGE MONITORS ARE NOT AN ACCEPTABLE REPLACEMENT FOR THE RECESSED DOOR POSITION SWITCH.
3. 4" SQUARE BACKBOX WITH SINGLE GANG PLASTER RING. PROVIDE 2 1/2" DEEP MASONRY BOX WHERE APPLICABLE. REFER TO FLOOR PLAN(S) FOR ACTUAL CREDENTIAL READER TYPE AND ROUGH-IN LOCATIONS.
4. CONDUIT SHALL ROUTE FROM THE CREDENTIAL READER TO THE SECURED SIDE OF THE DOOR. CONDUIT SHALL ROUTE ---A MINIMUM OF 12" FROM THE JUNCTION BOX.][TO THE NEAREST TELECOM ROOM.][TO NEAREST CABLE TRAY.][TO THE NEAREST SECURITY PANEL.][TO THE MAIN TELECOM ROOM][PROVIDE A NYLON BUSHING ON CONDUIT END}---.
5. MOUNT A MINIMUM 4" SQUARE 2-1/8" DEEP JUNCTION BOX WITH BLANK COVER PLATE ON THE SECURED SIDE OF THE DOOR ABOVE ACCESSIBLE CEILING. SIZE THE JUNCTION BOXES PER SYSTEM INSTALLATION REQUIREMENTS AND APPLICABLE CODES. MAINTAIN ACCESS TO THE JUNCTION BOX.
6. PROVIDE A HORIZONTALLY MOUNTED SINGLE GANG BACKBOX FOR THE REQUEST TO EXIT SENSOR. REFER TO THE ACCESS CONTROL DOOR TYPE SCHEDULE FOR DOORS THAT REQUIRE THIS ROUGH-IN.
7. CONDUIT SHALL ROUTE A MINIMUM OF 12" FROM THE JUNCTION BOX. CONDUIT INSTALLED IN PERMANENT MULLIONS ONLY. REFER TO THE ARCHITECTURAL DOOR SCHEDULE AND DOOR HARDWARE GROUPS FOR LOCATIONS THAT REQUIRE THIS ROUGH-IN. PROVIDE A NYLON BUSHING ON THE CONDUIT END.

1 ACCESS CONTROL DOOR ROUGH-IN DETAIL

1/2" = 1'-0"

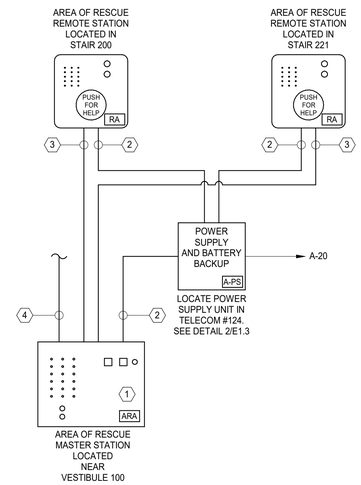

AREA OF RESCUE ASSISTANCE LEGEND

SYMBOL:	DESCRIPTION:	REMARKS:
ARA	AREA OF RESCUE: MAIN STATION FLUSHED MOUNTED. MOUNT 60" FROM FLOOR TO CENTER OF BOX.	RATH: 2500-205PSS
RA	AREA OF RESCUE: REMOTE STATION FLUSHED MOUNTED. MOUNT 48" FROM FLOOR TO PUSH BUTTON.	RATH: 2100-958NSR
A-PS	AREA OF RESCUE: LOW VOLTAGE POWER SUPPLY UNIT WITH BETTERY BACKUP.	RATH: 2500-PWR24U

2 FA-AREA OF RESCUE ASSISTANCE DIAGRAM

NO SCALE

KEY NOTES:

1. AREA OF RESCUE: MAIN STATION
   - UNIT SHALL PROVIDE 2 WAY COMMUNICATION BETWEEN REMOTE STATION AND MAIN STATION. UPON ACTIVATION OF THE EMERGENCY PUSH BUTTON AT THE REMOTE STATION , A CALL WILL BE AUTOMATICALLY PLACED TO THE MAIN STATION.
   - IF NO ONE ANSWERS AT THE BASE STATION, THE CALL BOX MUST DIAL A SECONDARY LOCATION OUTSIDE BUILDING TO ACTIVATE TWO-WAY OFF-SITE PERSON TO PERSON VOICE COMMUNICATION VIA LANDLINE, E.C. SHALL PROGRAM PHONE NUMBER PER OWNER INSTRUCTION.
   - CELLULAR DIAL OUT REQUIRED PER CODE IF NO ONE ANSWERS BASE STATION.

2. LOW VOLTAGE POWER SUPPLY CABLE IN CONDUIT.

3. LOW VOLTAGE COMMUNICATION AND CONTROL CABLE IN CONDUIT.

4. TELEPHONE CABLE IN CONDUIT TO TELECOM #124.
   - CONDUIT IS BY E.C.
   - TELEPHONE CABLE IS BY OWNER CONTRACTOR.

NOTES:

1. THE SYSTEM SHALL COMPLY WITH:
   a. THE AMERICANS WITH DISABILITIES ACT, SECTIONS 4.3.11.4 AND 4.3.11.5
   b. 2018 NC BUILDING CODE, SECTION 1009.8.1.
   c. UL LISTED FOR USE AS AN AREA OF RESCUE ASSISTANCE SYSTEM.
2. SIGNAGE:
   a. AT MAIN STATION, E.C. SHALL POST DIRECTIONS FOR THE USE OF THE TWO-WAY COMMUNICATION SYSTEM ADJACENT TO MAIN STATION IN COMPLIANCE WITH 2018 NC BUILDING CODE SECTION 1009.8.2.
   b. AT REMOTE STATION, E.C. SHALL POST:
      - DIRECTIONS FOR THE USE OF THE TWO-WAY COMMUNICATION SYSTEM ADJACENT TO REMOTE STATION IN COMPLIANCE WITH 2018 NC BUILDING CODE SECTION 1009.8.2.
      - INSTRUCTION HOW TO USE ARE OF REFUGE IN COMPLIANCE WITH 2018 NC BUILDING CODE SECTION 1009.11.
   c. AT EACH DOOR PROVIDING ACCESS TO AN AREA OF REFUGE, E.C. SHALL PROVIDE SIGNAGES IN COMPLIANCE WITH 2018 NC BUILDING CODE, SECTION 1009.9.
      - AN ILLUMINATED SIGN ABOVE DOOR ADJACENT TO EXIT SIGN.
      - AREA OF REFUGE GRAPHIC WITH RAISED LETTERING AND BRAILLE DOOR SIGN.
3. SEE FLOOR PLANS FOR QUANTITY AND LOCATION OF ALL EQUIPMENT.
4. LOW VOLTAGE WIRING:
   a. WIRING SHALL BE CIRCUIT INTEGRITY TYPE CABLE (CI), LISTED FOR 2 HOUR RATING PER MANUFACTURER SPECIFICATIONS.
   b. WIRING SHALL BE IN CONDUIT.
5. AREA OF RESCUE ASSISTANCE SYSTEM INSTALLATION SHALL BE BY A LICENSED CONTRACTOR.
6. SYSTEM WIRING SHALL BE IN ACCORDANCE WITH GOOD ENGINEERING PRACTICES AS ESTABLISHED BY EIA AND NEC. WIRING SHALL MEET ALL ESTABLISHED STATE AND LOCAL ELECTRICAL CODES. ALL WIRING SHALL BE TESTED FOR FLEE FROM SHORTS AND GROUNDED AS SPECIFIED.
7. MASTER AND REMOTE STATION MOUNTING HEIGHT SHALL BE IN ACCORDANCE WITH ADA RECOMMENDATIONS AND SPECIFICATIONS.
8. DIAGRAM SHOWN IN THIS DETAIL IS BASED ON RATH COMMUNICATIONS SYSTEM AND SHOWN AS A GUIDELINE. ACTUAL SYSTEM AND WIRING SHALL BE PER MANUFACTURER INSTRUCTION.
9. ACCEPTABLE MANUFACTURER:
   a. RATH COMMUNICATIONS
   b. ALPHA COMMUNICATIONS
   c. CORNELL

IMEG
3221 BLUE RIDGE ROAD
SUITE 113
RALEIGH, NC 27612
P: 919.571.1111
www.imegcorp.com

IMEG RESERVES PROPRIETARY RIGHTS, INCLUDING COPYRIGHTS, TO THIS DRAWING AND THE DATA SHOWN THEREON. SAID DRAWING AND/OR DATA ARE THE EXCLUSIVE PROPERTY OF IMEG AND SHALL NOT BE USED OR REPRODUCED FOR ANY OTHER PROJECT WITHOUT THE EXPRESS WRITTEN APPROVAL AND PARTICIPATION OF IMEG.
©2026 IMEG CONSULTANTS CORP.
North Carolina Design Registration #F-1507

0 1 2 3
REF. SCALE IN INCHES
PROJECT #26001727.00

Copyright © 2025 Oakley Collier Architects. These drawings are of the property of the Architect for use under his supervision. No reproduction or other use is allowed without permission.

OAKLEY COLLIER ARCHITECTS
OCA
109 Candlewood Road, Rocky Mount, NC 27804 (P) 252.937.2500
205 W. Martin Street, Raleigh, NC 27601

RENOVATION FOR:
CRAVEN COUNTY GOVERNMENT CENTER EAST
CRAVEN COUNTY
1208 E. MAIN STREET, HAVELOCK, NORTH CAROLINA 28532

NORTH CAROLINA PROFESSIONAL ENGINEERING CERTIFICATION
IMEG CORPORATION
No. F-1507

NORTH CAROLINA PROFESSIONAL SEAL 058287 ENGINEER ALEX R. BOWLING
5/29/2026

GENERAL NOTE:
Prior to construction start, Contractor shall verify & be responsible for all Dimensions.

Revisions

#	Description	Date

Date	Project No.
05-28-26	26001727.00
Drawn By: Author	Sheet No. E400
Checked By: Checker	

Sheet Title
ELECTRICAL DETAILS

1. NEW METER BASE BY E.C. PER UTILITY SPEC.
2. NEW C/T CABINET BY E.C. PER UTILITY SPEC.
3. NEW 600A, 208V, 3PH, NEMA 3R, FUSIBLE DISCONNECT. UL LISTED FOR USE AS SERVICE EQUIPMENT. E.C. SHALL FIELD VERIFY AVAILABLE MAXIMUM FAULT CURRENT WITH UTILITY AND PROVIDE LABEL INDICATING THE CURRENT ON DISCONNECT PER NEC 110.24(A). PROVIDE 600A CURRENT LIMITING FUSES, MINIMUM AIC RATING OF 65KA.
4. 2 SETS OF 4-#350 KCMIL IN 3" CONDUIT.
5. NEW PANELBOARD. SEE PANEL SCHEDULE.
6. GROUNDING ELECTRODE CONDUCTORS PER NEC 250.
   - 1-#2/0G CU IN 3/4"C TO BUILDING STEEL AND C.W. MAIN.
   - 1-#4G CU IN 1/2"C TO REINFORCE STEEL AT CONCRET FOOTING.
   - 1-#6G CU IN 1/2"C TO 2 DRIVEN RODS.
7. 2 SETS OF 4-#350KCMIL, 1-#1G IN 3" CONDUIT. CUT AND PATCH AS REQUIRED.
8. MANUAL TRANSFER SWITCH
   - 600A 120/208V, 3-PHASE, 4-WIRE, 65KA AIC RATING
   - NEMA 3R ECLOSURE
   - QUICK CONNECT FOR PORTABLE GENERATOR
   - ESL 3080 OR EQUAL

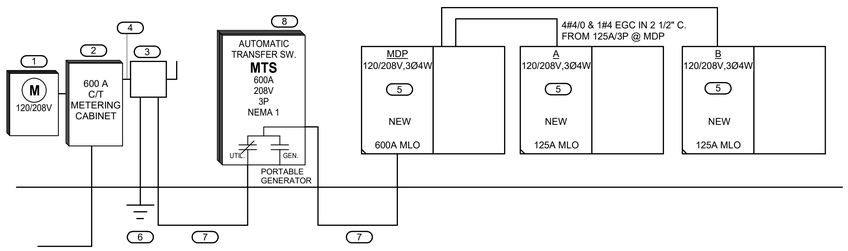

EXISTING SERVICE FROM LOCAL UTILITY.
CONTRACTOR TO COORDINATE NEW CONDUCTORS AND CONDUIT WITH UTILITY.
CONTRACTOR TO PROVIDE A COST PER FOOT.

1 POWER RISER DIAGRAM

12" = 1'-0"

PANEL A

MOUNTING: SURFACE
ENCLOSURE: NEMA 1
FED FROM: 125/3P @ MDP
LOCATION: ELEC 104

DOUBLE TUB
SOLID NEUTRAL
GROUND BUS

MAIN: 125 MLO
VOLTS: 120/208 Wye
PHASE: 3
WIRE: 4
SCCR: 10 kA
ISC: 0.24 kA

NOTES:

KEY	CKT NO.	LOAD DESCRIPTION	OCPD AMPS	P	WIRE SIZE H	N	G	A		B		C		WIRE SIZE G	N	H	P	OCPD AMPS	LOAD DESCRIPTION	CKT NO.	KEY
	1	WAITING RECPT + LOBBY 110	20	1	12	12	12	1.44	0.72					12	12	12	1	20	OFFICE 109 RECPT	2	
	3	OFFICE AND LOUNGE RECPT	20	1	12	12	12			0.72	0.18			12	12	12	1	20	COPIER DEDICATED RECPT	4	
	5	LOBBY AND COPY RECPT	20	1	12	12	12					0.54	0.72	12	12	12	1	20	BATHRM 120-123	6	
	7	BREAK 112 COUNTER 1	20	1	12	12	12	0.18	1.44					12	12	12	1	20	BATHROOM 111,119,118 AND HALLWAY	8	
	9	BREAK 112 COUNTER 2	20	1	12	12	12			0.18	0.72			12	12	12	1	20	OFFICE 130 +131 RECPT	10	
	11	BREAK 112 + FLEX RECPT	20	1	12	12	12					0.36	0.72	8	8	8	1	20	INSPECTIONS 134 +135 RECPT	12	
	13	MDP AND STORAGE 113 RECPT	20	1	12	12	12	0.18	0.72					12	12	12	1	20	FLEX 101 RECPT	14	
G	15	BREAK 112 REFRIGERATOR	20	1	12	12	12			0.18	0			12	12	12	1	20	ARA	16	
	17	OFFICE 131+132 RECPT	20	1	12	12	12					0.9	0.72	12	12	12	1	20	LOUNGE RM 126	18	
	19	STAFF 108 + BREAK 107 RECPT	20	1	12	12	12	0.72	1.08					10	10	10	1	20	OFFICE 212 + 210 RECPT	20	
	21	CONFERENCE 133 RECPT	20	1	12	12	12			0.72	0.9			12	12	12	1	20	TOILET 205+206+ CORRIDOR 200 RECPT	22	
	23	OFFICE 215 +214 RECPT	20	1	10	10	10					1.26	0.18	12	12	12	1	20	COPY 217 DEDICATED RECPT	24	
	25	OFFICE 208 +209 RECPT	20	1	10	10	10	1.26	0.18					12	12	12	1	20	BREAK 204 REFRIGERATOR	26	
	27	ELEVATOR SERVICE RECPT	20	1	12	12	12			0.18	0.54			12	12	12	1	20	BREAK 204 COUNTER 1 RECPT	28	
	29	ELEVATOR MACHINE RECPT	20	1	12	12	12					0.18	0.53	12	12	12	1	15	CP-1	30	
	31	CONFERENCE 213 + COPY 217 RECPT	20	1	12	12	12	1.62	0.5					12	12	12	1	20	FACP	32	LO
	33	OPEN WORK 211	20	1	12	12	12			0.54	0.5			12	12	12	1	20	NAC	34	LO
	35	BREAK 204 COUNTER 2 RECPT	20	1	12	12	12					0.18	0.7	12	12	12	1	20	PC + EXTERIOR LIGHTING	36	
	37	WH-1	30	2	10	10	10	2.25	0					--	--	--	1	20	SPARE	38	--
	39									2.25	0			--	--	--	1	20	SPARE	40	--
--	41	SPARE	20	1	--	--	--					0	0	--	--	--	1	20	SPARE	42	--
--	43	SPARE	20	1	--	--	--	0	0					--	--	--	1	20	SPARE	44	--
--	45	SPARE	20	1	--	--	--			0	0			--	--	--	1	20	SPARE	46	--
--	47	SPARE	20	1	--	--	--					0	0	--	--	--	1	20	SPARE	48	--
--	49	SPACE	--	1	--	--	--	--	--					--	--	--	1	--	SPACE	50	--
--	51	SPACE	--	1	--	--	--			--	--			--	--	--	1	--	SPACE	52	--
--	53	SPACE	--	1	--	--	--					--	--	--	--	--	1	--	SPACE	54	--
							Total Load:	12.29 kVA		7.61 kVA		6.99 kVA									
							Total Amps:	103.21		64.21		58.27									

LOAD SUMMARY

LOAD CLASSIFICATION	CONNECTED LOAD	DEMAND FACTOR	ESTIMATED DEMAND	TOTALS*	
Lighting	0.704 kVA	100.00%	0.704 kVA		
Power	6.028 kVA	100.00%	6.028 kVA	**TOTAL CONNECTED LOAD:**	26.89 kVA
Receptacles	20.16 kVA	74.80%	15.08 kVA	**TOTAL ESTIMATED DEMAND LOAD:**	21.812 kVA
				TOTAL CONNECTED AMPS:	74.65 A
				TOTAL ESTIMATED DEMAND AMPS:	60.5

*TOTAL DEMAND CALCS SUBTRACT ANY REDUNDANT LOAD AND THE SMALLER OF ANY NONCOINCIDENT HVAC LOADS. THIS CALC IS DONE AT EACH PANEL.

CIRCUIT KEY NOTES: SEE ELECTRICAL DISTRIBUTION AND PANEL SCHEDULE NOTES

ELECTRICAL - RISER DIAGRAM NOTES:

1. THE RISER DIAGRAM IS INTENDED TO CONVEY THE COMPONENTS OF THE ELECTRICAL DISTRIBUTION SYSTEM. REFER TO ELECTRICAL DRAWINGS, DETAILS, DISTRIBUTION / PANEL / EQUIPMENT / EQUIPMENT CONNECTION SCHEDULES, AND SPECIFICATIONS FOR ADDITIONAL INFORMATION.
2. SHORT CIRCUIT CURRENT RATINGS (SCCR) FOR EQUIPMENT ARE MINIMUM REQUIREMENTS FOR BUSS BRACING AND DEVICE RATING. ALL EQUIPMENT SHALL BE FULLY RATED UNLESS SPECIFICALLY NOTED AS SERIES RATED.
3. TRANSFER SWITCHES (SCCR) RATINGS ARE INTENDED AS WITHSTAND AND CLOSE RATINGS (WCR).
4. THE BASIS OF DESIGN: THE CONTRACTOR SHALL BE RESPONSIBLE FOR DERATING AND SIZING CONDUCTORS AND CONDUITS TO EQUAL OR EXCEED AMPACITY OF THE BASIS OF DESIGN CIRCUITS WHEN ALTERNATIVE METHODS OR MATERIALS OTHER THAN THE BASIS OF DESIGN ARE APPLIED. THE BASIS OF DESIGN IS COPPER CONDUCTOR UNLESS OTHERWISE SCHEDULED OR ALLOWED PER SPECIFICATION. ALUMINUM AND COPPER-CLAD ALUMINUM CONDUCTORS ARE NOT ALLOWED FOR THE PROJECT.
   a. RACEWAY: EMT UNLESS OTHERWISE NOTED
   b. FEEDER CHARACTERISTICS: ALL CURRENT CARRYING CONDUCTORS SHALL BE COPPER UNLESS NOTED OTHERWISE. CONDUCTOR SIZES ARE BASED ON AMERICAN WIRE GAUGE AWG AND KCMIL THOUSANDS OF CIRCULAR MIL. REFER TO SPECIFICATION SECTION 26 05 13 WIRE AND CABLE FOR ADDITIONAL INFORMATION
   c. GROUNDING AND BONDING CONDUCTORS SHALL BE COPPER.
   d. CONDUCTORS (MOTORS): COPPER
   e. [BLANK] OR [CU] INDICATES COPPER CONDUCTOR
5. PROVIDE GROUNDING ELECTRODE AND BONDING SYSTEM PER CODE REQUIREMENTS. PROVIDE THE FOLLOWING MINIMUM CONNECTIONS AND COMPONENTS. REFER TO SPECIFICATION SECTION 26 05 26 GROUNDING AND BONDING AND DETAILS WHEN APPLICABLE:
   a. CONCRETE-ENCASED GROUNDING ELECTRODE (UFER)
   b. METALLIC WATER MAIN
   c. BUILDING STEEL, EFFECTIVELY GROUNDED
6. PROVIDE MALLEABLE INSULATED GROUNDING BUSHING MGIB FOR ALL SERVICE AND FEEDER RACEWAYS BONDED TO GROUND BUS WITH CONDUCTOR SIZED TO MAXIMUM FEEDER GROUND CAPACITY, OZ GEDNEY OR EQUAL.
7. CONDUCTORS AND GROUND SIZES ON THE LINE AND LOAD SIDES OF ALL DISCONNECT SWITCHES SHALL BE IDENTICAL UNLESS NOTED OTHERWISE.
8. REFER TO COVER SHEET FOR ADDITIONAL EQUIPMENT TAG INFORMATION (SPD-#, M-#, ETC).
9. REFER TO GROUNDING ELECTRODE SYSTEM AND BONDING DETAILS
   a. EGC – EQUIPMENT GROUNDING CONDUCTOR
   b. GEC – GROUNDING ELECTRODE CONDUCTOR
   c. SSBJ – SUPPLY SIDE BONDING JUMPER
10. CIRCUIT BREAKER CHARACTERISTICS AND ACCESSORIES:
   a. [CB] INDICATES CIRCUIT BREAKER
   b. [FU] INDICATES FUSED SWITCH
   c. [MLO] INDICATES MAIN LUG ONLY
   d. [MCB] INDICATES MAIN CIRCUIT BREAKER
   e. [GF] INDICATES GROUND FAULT RELAY
   f. [SHUNT] INDICATES SHUNT TRIP BREAKER
   g. [KIRK] CAPTURED KEY INTERLOCK SWITCH

ELECTRICAL DISTRIBUTION AND PANEL SCHEDULE NOTES:

1. BRANCH PANEL KEY:
   a. *G = GROUND FAULT CIRCUIT INTERRUPT
   b. *S = SHUNT TRIP
   c. *LF = LOCK OFF PROVISION
   d. *LO = LOCK ON PROVISION
   e. *GP = GFPE BREAKER

PANEL MDP

MOUNTING: SURFACE
ENCLOSURE: NEMA 1
FED FROM: 0/0P @
LOCATION: ELEC 104

DOUBLE TUB
SOLID NEUTRAL
GROUND BUS

MAIN: 600 MLO
VOLTS: 120/208 Wye
PHASE: 3
WIRE: 4
SCCR: 65 kA
ISC UNKNOWN 0.00 kA

NOTES:

KEY	CKT NO.	LOAD DESCRIPTION	OCPD AMPS	P	WIRE SIZE H	N	G	A		B		C		WIRE SIZE G	N	H	P	OCPD AMPS	LOAD DESCRIPTION	CKT NO.	KEY
	1							5.04	4.32											2	
	3	SS-1	45	3	8	8	10			5.04	4.32			10	8	8	3	45	SS-2	4	
	5											5.04	4.32							6	
	7							5.04	5.04											8	
	9	SS-3	45	3	8	8	10			5.04	5.04			10	8	8	3	45	SS-4	10	
	11											5.04	5.04							12	
	13							5.04	4.07											14	
	15	SS-5	45	3	8	8	10			5.04	4.07			10	6	6	3	45	SS-6	16	
	17											5.04	4.07							18	
	19							4.07	2.28											20	
	21	SS-7	45	3	6	6	10			4.07	2.28			10	10	10	3	30	CU-1	22	
	23											4.07	2.28							24	
	25							3.96	3.96											26	
	27	CU-2	60	3	6	6	8			3.96	3.96			8	6	6	3	60	CU-3	28	
	29											3.96	3.96							30	
	31							2.28	2.28											32	
	33	CU-4	30	3	10	10	10			2.28	2.28			10	10	10	3	30	CU-5	34	
	35											2.28	2.28							36	
	37							2.28	12.29											38	
	39	CU-6	30	3	10	10	10			2.28	7.61			6	1	1	3	125	PANEL A	40	
	41											2.28	6.99							42	
	43							2.28	8.56											44	
	45	CU-7	30	3	10	10	10			2.28	6.65			6	1	1	3	125	PANEL B	46	
	47											2.28	7.19							48	
	49							5.77	1.98											50	
S	51	ELEVATOR MOTOR	60	3	8	8	10			5.77	1.98			10	10	10	2	30	CU-8	52	
	53											5.77	0	--	--	--	1	20	SPARE	54	--
							Total Load:	80.56 kVA		73.98 kVA		71.92 kVA									
							Total Amps:	673.99		619.14		599.36									

LOAD SUMMARY

LOAD CLASSIFICATION	CONNECTED LOAD	DEMAND FACTOR	ESTIMATED DEMAND	TOTALS*	
HVAC	155.923 kVA	80.00%	124.739 kVA		
Lighting	9.237 kVA	100.00%	9.237 kVA	**TOTAL CONNECTED LOAD:**	226.47 kVA
Power	34.39 kVA	100.00%	34.39 kVA	**TOTAL ESTIMATED DEMAND LOAD:**	186.823 kVA
Receptacles	26.916 kVA	68.58%	18.458 kVA	**TOTAL CONNECTED AMPS:**	628.61 A
				TOTAL ESTIMATED DEMAND AMPS:	518.6

*TOTAL DEMAND CALCS SUBTRACT ANY REDUNDANT LOAD AND THE SMALLER OF ANY NONCOINCIDENT HVAC LOADS. THIS CALC IS DONE AT EACH PANEL.

CIRCUIT KEY NOTES:

PANEL B

MOUNTING: SURFACE
ENCLOSURE: NEMA 1
FED FROM: 125/3P @ MDP
LOCATION: ELEC 104

DOUBLE TUB
SOLID NEUTRAL
GROUND BUS

MAIN: 125 MLO
VOLTS: 120/208 Wye
PHASE: 3
WIRE: 4
SCCR: 10 kA
ISC: 0.23 kA

NOTES:

KEY	CKT NO.	LOAD DESCRIPTION	OCPD AMPS	P	WIRE SIZE H	N	G	A		B		C		WIRE SIZE G	N	H	P	OCPD AMPS	LOAD DESCRIPTION	CKT NO.	KEY
	1	FIRST FLOOR Q3	20	1	8	8	8	1.79	0.85					10	10	10	1	20	2ND FLOOR COORIDOR/BATHRM LIGHTS	2	
	3	FIRST FLOOR Q2	20	1	10	10	10			1.3	0.56			12	12	12	1	20	2ND FLOOR COMMON AREA LIGHTS	4	
	5	OFFICE 131 RECPT	20	1	12	12	12					0.72	1.6	8	8	8	1	20	FIRST FLOOR Q1 LIGHTS	6	
	7	COUNTY FLEX SPACE WALL RECPT	20	1	12	12	12	1.44	0.67					12	12	12	1	20	FIRST FLOOR COORIDOR LIGHTS	8	
	9	2ND FLOOR OFFICES LIGHTS	20	1	10	10	10			0.86	0.18			12	12	12	1	20	ARA AND ELEVATOR RECEPT	10	
	11	STAIRWELL LIGHTS	20	1	10	10	10					0.91	0.54	12	12	12	1	20	OPEN WORK 211 RECPT	12	
G	13	WATER COOLER POWER	20	1	12	12	12	0.5	0.67					10	10	10	1	30	DEHUMIDIFIER 1	14	
	15	DEHUMIDIFER 2	30	1	10	10	10			0.67	1.5			12	12	12	1	15	UNIT HEATER 2	16	
	17	DEHUMIDIFIER 3	30	1	10	10	10					0.67	0.18	12	12	12	1	20	BREAK 107 RECPT	18	
	19	UNIT HEATER 1	20	1	12	12	12	1.5	0.18					12	12	12	1	20	BREAK 107 RECPT	20	
	21	ROOFTOP RECPT	20	1	12	12	12			0.54	0.18			12	12	12	1	20	BREAK 107 RECPT	22	
	23	SIGN LIGHTING	20	1	12	12	12					0.5	0.72	12	12	12	1	20	INSPECTION 134 RECPT	24	
GP	25	HOT BOX RECPT	20	1	12	12	12	0.18	0.18					12	12	12	1	20	MDP 116	26	
	27	SIGN LIGHTING	20	1	12	12	12			0.5	0.36			12	12	12	1	20	TCBB RECEPT	28	
G	29	SUMP PUMP RECPT ELEVATOR	20	1	12	12	12					1.18	0.18	12	12	12	1	20	MDP 116	30	
	31	SUMP ALARM	20	1	12	12	12	0.1	0.5					12	12	12	1	20	ELEVATOR CAR LIGHTS/CONTROLS	32	
--	33	SPARE	20	1	--	--	--			0	0			12	12	12	1	20	TIME CLOCK	34	
--	35	SPARE	20	1	--	--	--					0	0	--	--	--	1	20	SPARE	36	--
--	37	SPARE	20	1	--	--	--	0	0					--	--	--	1	20	SPARE	38	--
--	39	SPARE	20	1	--	--	--			0	0			--	--	--	1	20	SPARE	40	--
--	41	SPARE	20	1	--	--	--					0	0	--	--	--	1	20	SPARE	42	--
--	43	SPARE	20	1	--	--	--	0	0					--	--	--	1	20	SPARE	44	--
--	45	SPACE	--	1	--	--	--			--	--			--	--	--	1	--	SPACE	46	--
--	47	SPACE	--	1	--	--	--					--	--	--	--	--	1	--	SPACE	48	--
--	49	SPACE	--	1	--	--	--	--	--					--	--	--	1	--	SPACE	50	--
--	51	SPACE	--	1	--	--	--			--	--			--	--	--	1	--	SPACE	52	--
--	53	SPACE	--	1	--	--	--					--	--	--	--	--	1	--	SPACE	54	--
							Total Load:	8.56 kVA		6.65 kVA		7.19 kVA									
							Total Amps:	71.99		55.44		60.60									

LOAD SUMMARY

LOAD CLASSIFICATION	CONNECTED LOAD	DEMAND FACTOR	ESTIMATED DEMAND	TOTALS*	
Lighting	8.532 kVA	100.00%	8.532 kVA		
Power	7.11 kVA	100.00%	7.11 kVA	**TOTAL CONNECTED LOAD:**	22.40 kVA
Receptacles	6.756 kVA	100.00%	6.756 kVA	**TOTAL ESTIMATED DEMAND LOAD:**	22.398 kVA
				TOTAL CONNECTED AMPS:	62.17 A
				TOTAL ESTIMATED DEMAND AMPS:	62.2

*TOTAL DEMAND CALCS SUBTRACT ANY REDUNDANT LOAD AND THE SMALLER OF ANY NONCOINCIDENT HVAC LOADS. THIS CALC IS DONE AT EACH PANEL.

CIRCUIT KEY NOTES: SEE ELECTRICAL DISTRIBUTION AND PANEL SCHEDULE NOTES

IMEG
www.imegcorp.com
3221 BLUE RIDGE ROAD
SUITE 113
RALEIGH, NC 27612
P: 919.571.1111

IMEG RESERVES PROPRIETARY RIGHTS, INCLUDING COPYRIGHTS. TO THIS DRAWING AND THE DATA SHOWN THEREON. SAID DRAWING AND/OR DATA ARE THE EXCLUSIVE PROPERTY OF IMEG AND SHALL NOT BE USED OR REPRODUCED FOR ANY OTHER PROJECT WITHOUT THE EXPRESS WRITTEN APPROVAL AND PARTICIPATION OF IMEG.
©2026 IMEG CONSULTANTS CORP.

North Carolina Design Registration #F-1507

0 1 2 3
REF. SCALE IN INCHES

PROJECT #26001727.00

OAKLEY COLLIER ARCHITECTS
OCA
109 Candlewood Road, Rocky Mount, NC 27804 (P) 252.937.2500
205 W. Martin Street, Raleigh, NC 27601

RENOVATION FOR:
CRAVEN COUNTY GOVERNMENT CENTER EAST
CRAVEN COUNTY
1208 E. MAIN STREET, HAVELOCK, NORTH CAROLINA 28532

NORTH CAROLINA PROFESSIONAL ENGINEER SEAL 058287 ALEX R. BOWLING
IMEG CORPORATION No. F-1507

5/29/2026

GENERAL NOTE:
Prior to construction start, Contractor shall verify & be responsible for all Dimensions.

Revisions

#	Description	Date

Date	Project No.
05-28-26	26001727.00

Drawn By	Sheet No.
Author	E600
Checked By	
Checker	

Sheet Title
ELECTRICAL SCHEDULES

Copyright © 2025 Oakley Collier Architects. These drawings are of the property of the Architect for use under his supervision. No reproduction or other use is allowed without permission.

DISCONNECT AND STARTER SCHEDULE

NOTE: ALL DISCONNECTS (EXCEPT MANUAL STARTERS) SHALL BE HEAVY DUTY TYPE.

DISCONNECT TYPE:	ACCESSORIES & OPTIONS	
FU - FUSED	SA - STANDARD ACCESSORIES...	PF - PHASE LOSS PROTECTION (5 HP OR GREATE...
NF - NON-FUSED	*CT - CONTROL TRANSFORMER, FUSED...	TO - MELTING THERMAL OVERLOADS (1 PHASE)
CB - CIRCUIT BREAKER	*EO - ELECTRONIC OVERLOAD (3 PHASE...	TS - 2 SPEED SELECTOR SWITCH IN DOOR
	*HA - HAND-OFF-AUTO IN DOOR	GP - GREEN (OFF) PILOT LIGHT IN DOOR
STARTER TYPE:	*RP - RED (RUN) PILOT LIGHT IN DOOR	FA - 4-CONVERTIBLE AUXILIARY CONTACTS
FV - FULL VOLTAGE	*TA - TWO CONVERTIBLE AUXILIARY...	EI - ELECTRICAL INTERLOCK (2)-N.O. & (2)-N.C.
YD - WYE - DELTA	S/N - INSULATED NEUTRAL ASSEMBLY	SS - START-STOP PUSHBUTTON IN DOOR
RE - REVERSING		HL - HANDLE PADLOCK HASP
MX - MANUAL SWITCH		

ITEM	DISCONNECT TYPE & RATING			VOLTAGE	POLES	ENCLOSURE	COMMENTS
	TYPE	RATING	TRIP RATING				
FDS-CU-1	FU	30	25	208	3	NEMA 3R	
FDS-CU-2	FU	60	35	208	3	NEMA 3R	
FDS-CU-3	FU	60	35	208	3	NEMA 3R	
FDS-CU-4	FU	30	25	208	3	NEMA 3R	
FDS-CU-5	FU	30	25	208	3	NEMA 3R	
FDS-CU-6	FU	30	25	208	3	NEMA 3R	
FDS-CU-7	FU	30	25	208	3	NEMA 3R	
FDS-CU-8	FU	30	25	208	3	NEMA 3R	
FDS-JH	FU	60	30	208	3	NEMA 1	
FDS-JH1	FU	60	60	208	3	NEMA 1	
FDS-JHL	FU	30	20	120	1	NEMA 1	
FDS-MDP	FU	600	600	208	3	NEMA 3R	
FDS-SS-1	FU	60	45	208	3	NEMA 1	
FDS-SS-2	FU	60	45	208	3	NEMA 1	
FDS-SS-3	FU	60	45	208	3	NEMA 1	
FDS-SS-4	FU	60	45	208	3	NEMA 1	
FDS-SS-6	FU	60	45	208	3	NEMA 1	
FDS-SS-7	FU	60	45	208	3	NEMA 1	
FDS-WH-1	FU	30	30	208	3	NEMA 1	

Luminaire Schedule (design)

TAG	DESCRIPTION	MTG	LIGHT SOURCE	DELIVERED LUMENS	ANSI WATTS	PER	VOLTAGE	MANUFACTURER SERIES	NOTES
A	2X4 FLAT PANEL	RE	LED	4,677 lm	39	FIX	120	LITHONIA CPX 2X4 ALO8 SWW7	OR SIMILAR
A/EM	2X4 BATTERY BACKUP FLAT PANEL	RE	LED	4,677 lm	39	FIX	120	LITHONIA CPX 2X4 ALO8 SWW7	OR SIMILAR
B	2X2 FLAT PANEL	RE	LED	3,356 lm	32	FIX	120	LITHONIA CPX 2X2 ALO7 SWW7	OR SIMILAR
B/EM	2X2 FLAT PANEL BATTERY BACKUP	RE	LED	3,356 lm	32	FIX	120	LITHONIA CPX 2X2 ALO7 SWW7	OR SIMILAR
C1	STANDARD DOWNLIGHT	RE	LED	2,000 lm	9	FIX	120	LITHONIA LBR8 ALO2 SWW1	OR SIMILAR
EM#	EMERGENCY UNIT - 2 HEAD	WL	<varies>	<varies>	0	FIX	120	LITHONIA ELM6L LTP	OR SIMILAR
EXG	SINGLE-FACE EXIT SIGN	CL	LED	0 lm	0	FIX	120	LITHONIA LHQM	OR SIMILAR
F2EM	2 FT BATTERY BACKUP/LINEAR RECESSED CHANNEL	RE	LED	1,061 lm	9	FIX	120	ALCON 12100-20-R- D9	OR SIMILAR
F4	4 FT VERTICAL LINEAR RECESSED CHANNEL	RE	LED	820 lm	7	FIX	120	ALCON 12100-20-R- D6	OR SIMILAR
F4EM	4 FT BATTERY BACKUP/LINEAR RECESSED CHANNEL	RE	LED	820 lm	7	FIX	120	ALCON 12100-20-R- D6	OR SIMILAR
F6	6 FT VERTICAL LINEAR RECESSED CHANNEL	RE	LED	820 lm	12	FIX	120	ALCON 12100-20-R- D6	OR SIMILAR
L4	4 FT LINEAR LED SYSTEM SURFACE	SM	LED	4,333 lm	38	FT	120	CSS L48 ALO15 MVOLT ZT	OR SIMILAR
L4/EM	4 FT BATTER BACKUP LINEAR LED SYSTEM SURFACE	SM	LED	3,000 lm	50	FT	120	LITHONIA LL# 3000LM 80CRI 35K ZT	OR SIMILAR
VP	4 FT BATTERY BACKUP LINEAR LED SYSTEM VAPORTIGHT	SM	LED	2,648 lm	19	FT	120	CSVT L48 ALO3 MVOLT SWW3 80CRI	OR SIMILAR
WP	WALL MOUNTED PACK LIGHT	WL	LED	1,500 lm	70	FIX	120	LITHONIA WDGE1	OR SIMILAR

LUMINAIRE SHADING KEY

NORMAL BRANCH LUMINAIRE

FIXTURE WITH INTEGRAL BATTERY BACKUP

LUMINAIRE CIRCUIT AND CONTROL KEY

LUMINAIRE

F1 = FIXTURE TAG
1 = CIRCUIT NUMBER
a = SWITCH DESIGNATION
z1=ZONE DESIGNATION
"NL" INDICATES LUMINAIRE IS UNSWITCHED FOR NIGHT LIGHT.
*IF LABEL IS ORIENTED HORIZONTALLY A SLASH WILL SEPARATE THIS INFORMATION. EX: F1 / 1 / a / NL

ELECTRICAL SYMBOL LIST

SYMBOL:	TAG:	DESCRIPTION:
	REFER TO LUMINAIRE SCHEDULE	LINEAR LUMINAIRES
		TROFFER
		WALL SCONCE LUMINAIRE
		DOWNLIGHT LUMINAIRE
		AIMABLE OR WALL WASH LUMINAIRE
		INDUSTRIAL LUMINAIRE
		WALL BRACKET LUMINAIRE
		POLE MOUNTED LUMINAIRE
		SINGLE FACE EXIT SIGN
		DOUBLE FACE EXIT SIGN
		WALL/CEILING EMERGENCY EXIT SIGN
		EMERGENCY UNIT

IMEG
www.imegcorp.com
3221 BLUE RIDGE ROAD
SUITE 113
RALEIGH, NC 27612
P: 919.571.1111

IMEG RESERVES PROPRIETARY RIGHTS, INCLUDING COPYRIGHTS, TO THIS DRAWING AND THE DATA SHOWN THEREON. SAID DRAWING AND/OR DATA ARE THE EXCLUSIVE PROPERTY OF IMEG AND SHALL NOT BE USED OR REPRODUCED FOR ANY OTHER PROJECT WITHOUT THE EXPRESS WRITTEN APPROVAL AND PARTICIPATION OF IMEG.
©2026 IMEG CONSULTANTS CORP.

North Carolina Design Registration #F-1507

0 1 2 3
REF. SCALE IN INCHES

PROJECT #26001727.00

Copyright © 2025 Oakley Collier Architects. These drawings are of the property of the Architect for use under his supervision. No reproduction or other use is allowed without permission.

OAKLEY COLLIER ARCHITECTS
OCA
109 Candlewood Road, Rocky Mount, NC 27804 (P) 252.937.2500
205 W. Martin Street, Raleigh, NC 27601

RENOVATION FOR:
CRAVEN COUNTY GOVERNMENT CENTER EAST
CRAVEN COUNTY
1208 E. MAIN STREET, HAVELOCK, NORTH CAROLINA 28532

NORTH CAROLINA PROFESSIONAL ENGINEERING CORPORATION
IMEG CORPORATION
No. F-1507

Alex Bowling
NORTH CAROLINA PROFESSIONAL SEAL 058287 ENGINEER ALEX R. BOWLING
5/29/2026

GENERAL NOTE:
Prior to construction start, Contractor shall verify & be responsible for all Dimensions.

Revisions

#	Description	Date

Date	Project No.
05-28-26	26001727.00
Drawn By: Author	Sheet No. E601
Checked By: Checker	

Sheet Title
ELECTRICAL SCHEDULES

SYSTEM INPUTS / SEQUENCE OF OPERATION		PANEL/ANNUNCIATOR ALARM INDICATION	PANEL/ANNUNCIATOR SUPERVISORY INDICATION	PANEL/ANNUNCIATOR TROUBLE INDICATION	AUDIBLE ALARMS SEQUENCE	VISUAL ALARMS SEQUENCE	ELECTRIC SPRINKLER BELL SEQUENCE (##)	SPRINKLER PREACTION ACTIVATION SEQUENCE (##)	SMOKE DAMPER CONTROL SEQUENCE (##)	AHU & MECHANICAL FAN SHUTDOWN SEQUENCE (##)	ELEVATOR RECALL SEQUENCE (##)	ELEVATOR SHUT DOWN SEQUENCE (##)	FIREFIGHTER'S CAB VISUAL ALARM SEQUENCE (##)	ELEVATOR HOISTWAY DAMPER SEQUENCE (##)
FIRE ALARM PANEL, TRANSPONDER, NAC PANEL LOW BATTERY			X											
FIRE ALARM PANEL, TRANSPONDER, NAC PANEL BATTERY OR CHARGER FAILURE				X										
FIRE ALARM PANEL, TRANSPONDER, NAC PANEL ABNORMAL SWITCH OR CONTROL POSITION.			X											
FIRE ALARM PANEL, TRANSPONDER, NAC PANEL GROUND FAULT, OPEN CIRCUIT, SHORT CIRCUIT				X										
FIRE ALARM PANEL, TRANSPONDER, NAC PANEL AC POWER LOSS OR IRREGULARITY				X										
NOTIFICATION APPLIANCE CIRCUIT OR SLC LOOP GROUND FAULT, OPEN CIRCUIT, SHORT CIRCUIT				X										
INITIATING DEVICE FAILURE OR COMMUNICATION ERROR				X										
FIRE ALARM PANEL MANUAL FIRE DRILL			X		X	X								
MANUAL PULL STATION	FT F	X			X	X			X	X				
SMOKE DETECTOR	S #/_ S #/_	X			X	X			X	X				
HEAT DETECTOR	H #/_ H #/_ H #/_	X			X	X			X	X				
SMOKE DETECTORS IN ELEVATOR LOBBIES	S E S E	X			X	X			X	X	X			X
SMOKE DETECTORS IN ELEVATOR MACHINE ROOM & HOISTWAY	S E S E	X			X	X			X	X	X		X	X
HEAT DETECTOR NEAR ELEVATOR SPRINKLERS	H E H E	X			X	X			X	X		X		
ELEVATOR SHUNT TRIP CIRCUIT POWER FAILURE	MM 1		X											
ELEVATOR HOISTWAY DAMPER SWITCH	MM HD HDS		X											X
ELEVATOR HOISTWAY DAMPER POWER FAILURE	MM		X											X

NOTES:

1. ALL SYSTEM EVENTS SHALL BE LOGGED, PRINTED, AND DISPLAYED ON THE GRAPHICAL OR ANNUNCIATOR INTERFACE, IF APPLICABLE. SEE SPECIFICATIONS FOR MORE INFORMATION AND DESCRIPTIONS OF SEQUENCES OF OPERATION.
2. PARTIAL EVACUATION OR RELOCATION OF OCCUPANTS IS THE STANDARD OPERATING PROCEDURE FOR THIS FACILITY IN THE EVENT OF AN ALARM. THEREFORE, ALL NOTIFICATION APPLIANCE CIRCUITS MUST BE INSTALLED AND PROTECTED IN ACCORDANCE WITH THE CIRCUIT SURVIVABILITY REQUIREMENTS DESCRIBED IN NFPA 72. SEE SPECIFICATIONS FOR ADDITIONAL REQUIREMENTS.

KEYNOTES:

1. UTILIZE A GENERAL PURPOSE RELAY TO MONITOR POWER LOSS. CONNECT THE CONTACTS OF THE RELAY TO A FIRE ALARM MONITOR MODULE.
2. UTILIZE (3) GENERAL PURPOSE RELAYS AS SHOWN ON DRAWINGS WITH A COIL VOLTAGE THAT MATCHES THE MOTOR VOLTAGE TO MONITOR POWER LOSS. CONNECT EACH RELAY COIL TO ONE PHASE OF THE MOTOR FEEDER DOWNSTREAM OF THE DISCONNECTING MEANS, BUT AHEAD OF THE CONTROL CONTACTOR. CONNECT THE CONTACTS OF THE RELAYS IN SERIES TO A FIRE ALARM MONITOR MODULE.

1 FIRE ALARM OPERATION MATRIX

NO SCALE

FIRE ALARM INSTALLATION NOTES:

1. MOUNT ALL FIRE ALARM PULL STATIONS AT +42" FROM FLOOR (CENTERLINE DIMENSION) EXCEPT WHERE OTHERWISE NOTED.
2. INSTALL ALL WALL MOUNTED FIRE ALARM NOTIFICATION DEVICES AT 90" ABOVE FINISHED FLOOR OR 6" BELOW THE CEILING, WHICHEVER IS LOWER, EXCEPT WHERE OTHERWISE NOTED. HEIGHT SHALL BE MEASURED TO THE TOP OF THE DEVICE.
3. CONTRACTOR SHALL COORDINATE THE LOCATION OF ALL CEILING MOUNTED DEVICES AND EQUIPMENT WITH LUMINAIRES, SPRINKLER, AND CEILING DIFFUSERS. CENTER ALL DEVICES IN CEILING TILE PATTERN. SMOKE DETECTORS,CARBON MONOXIDE DETECTORS, AND OCCUPANCY/VACANCY SENSORS SHALL BE LOCATED NO CLOSER THAN 3 FEET TO AN AIR SUPPLY DIFFUSER OR RETURN GRILLE. CARBON MONOXIDE DETECTORS SHALL BE LOCATED 10 PLUS FT FROM FIRE PLACES, COOKING, AND SIMILAR FUEL-BURNING APPLIANCES.
4. REFER TO ARCHITECTURAL REFLECTED CEILING PLAN, ELECTRICAL, TECHNOLOGY AUDIO/VISUAL, AND OTHER ELECTRICAL PLANS FOR EXACT LOCATIONS OF ALL CEILING MOUNTED DEVICES, OTHER THAN SPRINKLERS.

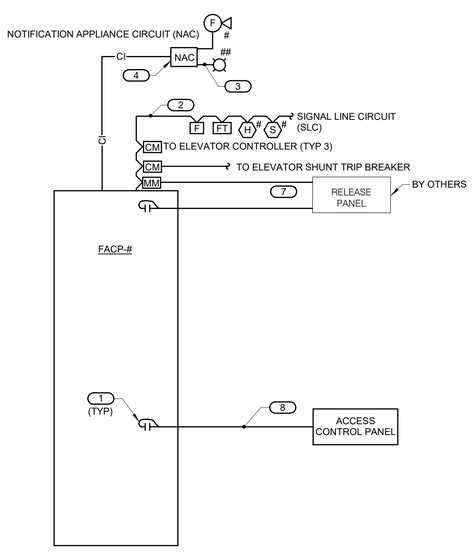

NOTES:

1. THE RISER DIAGRAM IS INTENDED TO CONVEY THE TYPES OF FIRE ALARM CONNECTIONS AND SPECIFICALLY DOES NOT INDICATE QUANTITIES, NUMBER OF CIRCUITS REQUIRED OR DISTANCES.
2. THE COMPLETE FIRE ALARM SYSTEM SHALL MEET ALL APPLICABLE CODES AND MANUFACTURER'S RECOMMENDATIONS.
3. CONTRACTOR SHALL COORDINATE ALL WIRE SIZES, TYPES AND REQUIREMENTS WITH THE VENDOR PRIOR TO BID. REFER TO SPECIFICATIONS TO DETERMINE CIRCUIT STYLES AND IF CONDUIT IS REQUIRED OR PLENUM RATED CABLE IS ACCEPTABLE.
4. ALL +120VAC WIRING REQUIRED FOR OPERATION OF THE SYSTEM AS DESCRIBED IN THE CONSTRUCTION DOCUMENTS SHALL BE PROVIDED BY THE ELECTRICAL CONTRACTOR.
5. ALL NECESSARY RELAYS MAY NOT BE SHOWN ON THIS PLAN, BUT WHERE REQUIRED FOR PROPER OPERATION OF THE SYSTEM THEY SHALL BE PROVIDED BY THE CONTRACTOR.
6. PARTIAL EVACUATION OR RELOCATION OF OCCUPANTS IS THE STANDARD OPERATING PROCEDURE FOR THIS FACILITY IN THE EVENT OF AN ALARM. THEREFORE, ALL NOTIFICATION APPLIANCE CIRCUITS MUST BE INSTALLED AND PROTECTED IN ACCORDANCE WITH THE CIRCUIT SURVIVABILITY REQUIREMENTS DESCRIBED IN NFPA 72. SEE SPECIFICATIONS FOR ADDITIONAL REQUIREMENTS.

KEYNOTES: (#)

1. REPRESENTATIVE OF PROGRAMMABLE I/O POINTS IN THE PANEL OR A GENERAL SYSTEM TROUBLE/ALARM CONTACT CONNECTED TO THE SYSTEM NOTED. REFER TO SPECIFICATIONS FOR MORE INFORMATION.
2. REFER TO SPECIFICATION FOR REQUIREMENTS OF EACH INITIATION LOOP AND WIRING STYLE. REFER TO FLOOR PLANS FOR DEVICES AND THEIR LOCATIONS.
3. REFER TO SPECIFICATION FOR REQUIREMENTS OF EACH NOTIFICATION APPLIANCE CIRCUIT AND WIRING STYLE. REFER TO FLOOR PLANS FOR DEVICES AND THEIR LOCATIONS.
4. PROVIDE NOTIFICATION APPLIANCE EXTENDER PANELS AS REQUIRED. DETERMINATION OF NEED TO BE MADE BY FIRE ALARM VENDOR. REFER TO SPECIFICATIONS FOR REQUIREMENTS AND ACCEPTABLE MOUNTING LOCATIONS.
5. FIREMAN'S PHONE SYSTEM SHALL BE A SINGLE CHANNEL IN ACCORDANCE WITH NFPA CODE REQUIREMENTS. VENDOR TO DETERMINE NUMBER OF CIRCUITS REQUIRED.
6. THE RELEASE PANEL WILL PROVIDE CONTACT CLOSURES TO BE MONITORED BY THE FIRE ALARM PANEL. THE ALARM AND AGENT RELEASE SIGNALS SHALL ACTIVATE A GENERAL ALARM. THE PRE-SIGNAL SHALL ACTIVATE A WARNING ON THE GUI ONLY.
7. REPRESENTS THE EXTENSION OF PROGRAMMABLE RELAYS TO THE ACCESS CONTROL SYSTEM. REFER TO SPECIFICATION SECTION 28 13 00 FOR QUANTITY OF POINTS REQUIRED.
8. THIS CONTRACTOR SHALL PROVIDE AN RS-232 CONNECTION FROM THE FIRE ALARM PANEL TO THE ALPHANUMERIC PAGING SYSTEM. THE FIRE ALARM VENDOR SHALL SUPPLY THE COMMUNICATION PROTOCOL TO THE OWNER. REFER TO SPECIFICATIONS FOR MORE INFORMATION.

2 FIRE ALARM RISER

NO SCALE

ELECTRICAL SYMBOL LIST - FIRE ALARM

SYMBOL	TAG	EQUIP ABBREV	SPEC SECTION	DESCRIPTION
# S	<varies>	FA-120	28 31 00	SMOKE DETECTOR - LOCATED IN ATTIC
# H	E	FA-140	28 31 00	HEAT DETECTOR
	E	FA-140	28 31 00	HEAT DETECTOR - LOCATED IN ATTIC
F		FA-130	28 31 00	MANUAL PULL STATION
#	##	FA-200	28 31 00	VISUAL ALARM DEVICE - ## INDICATES CANDELA RATING
# F	##	FA-211	28 31 00	COMBINATION AUDIO (HORN/CHIME) / VISUAL ALARM DEVICE - ## INDICATES CANDELA RATING
FACP		FACP		CONTROL PANEL
NAC		NAC		NOTIFICATION APPLIANCE CIRCUIT
FAAP		FAAP		ANNUNCIATOR PANEL

FIRE ALARM SEQUENCES KEY:

SUBSCRIPTS: TYPE/PROGRAMMING:

E	ELEVATOR RECALL
SW	STAIRWELL
#	15, 30, 75, 110, 177 CANDELA RATING
CD	CANDELA RATING SELECTED BY NICET DESIGNER

IMEG
www.imegcorp.com
3221 BLUE RIDGE ROAD
SUITE 113
RALEIGH, NC 27612
P: 919.571.1111

IMEG RESERVES PROPRIETARY RIGHTS, INCLUDING COPYRIGHTS, TO THIS DRAWING AND THE DATA SHOWN THEREON. SAID DRAWING AND/OR DATA ARE THE EXCLUSIVE PROPERTY OF IMEG AND SHALL NOT BE USED OR REPRODUCED FOR ANY OTHER PROJECT WITHOUT THE EXPRESS WRITTEN APPROVAL AND PARTICIPATION OF IMEG.
©2026 IMEG CONSULTANTS CORP.

North Carolina Design Registration #F-1507

0 1 2 3

REF. SCALE IN INCHES

PROJECT #26001727.00

Copyright © 2025 Oakley Collier Architects. These drawings are of the property of the Architect for use under his supervision. No reproduction or other use is allowed without permission.

OAKLEY COLLIER ARCHITECTS
OCA
109 Candlewood Road, Rocky Mount, NC 27804 (P) 252.937.2500
205 W. Martin Street, Raleigh, NC 27601

RENOVATION FOR:

CRAVEN COUNTY GOVERNMENT CENTER EAST

CRAVEN COUNTY
1208 E. MAIN STREET, HAVELOCK, NORTH CAROLINA 28532

NORTH CAROLINA PROFESSIONAL CORPORATION
IMEG CORPORATION
No. F-1507

Alex Bowling
NORTH CAROLINA PROFESSIONAL SEAL 058287 ENGINEER ALEX R. BOWLING
5/28/2026

GENERAL NOTE:
Prior to construction start. Contractor shall verify & be responsible for all Dimensions.

Revisions

#	Description	Date

Date 05-28-26	Project No. 26001727.00
Drawn By Author	Sheet No. FA000
Checked By Checker	

Sheet Title
FIRE ALARM COVERSHEET

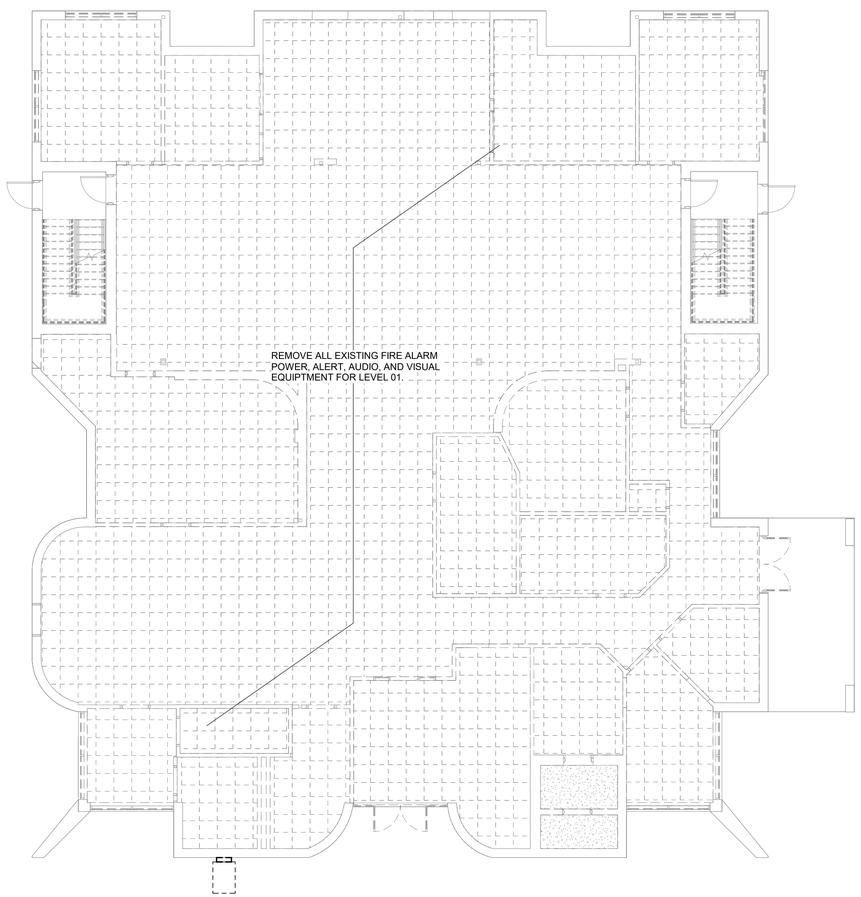

1 FIRST FLOOR DEMOLITION PLAN - FIRE ALARM

1/8" = 1'-0"

2 FIRST FLOOR PLAN - FIRE ALARM

1/8" = 1'-0"

NORTH

OAKLEY COLLIER ARCHITECTS
109 Candlewood Road, Rocky Mount, NC 27804 (P) 252.937.2500
205 W. Martin Street, Raleigh, NC 27601

RENOVATION FOR:
CRAVEN COUNTY GOVERNMENT CENTER EAST
CRAVEN COUNTY
1208 E. MAIN STREET, HAVELOCK, NORTH CAROLINA 28532

NORTH CAROLINA PROFESSIONAL ENGINEERING CORPORATION
IMEG CORPORATION
No. F-1507

Alex Bowling
NORTH CAROLINA PROFESSIONAL SEAL 058287 ENGINEER ALEX R. BOWLING
5/28/2026

GENERAL NOTE:
Prior to construction start. Contractor shall verify & be responsible for all Dimensions.

Revisions

#	Description	Date

Date	Project No.
05-28-26	26001727.00
Drawn By: Author	Sheet No.
Checked By: Checker	FA204

Sheet Title: FIRST FLOOR PLAN - FIRE ALARM

IMEG
3221 BLUE RIDGE ROAD
SUITE 113
RALEIGH, NC 27612
P: 919.571.1111
www.imegcorp.com

IMEG RESERVES PROPRIETARY RIGHTS, INCLUDING COPYRIGHTS, TO THIS DRAWING AND THE DATA SHOWN THEREON. SAID DRAWING AND/OR DATA ARE THE EXCLUSIVE PROPERTY OF IMEG AND SHALL NOT BE USED OR REPRODUCED FOR ANY OTHER PROJECT WITHOUT THE EXPRESS WRITTEN APPROVAL AND PARTICIPATION OF IMEG.
©2026 IMEG CONSULTANTS CORP.

North Carolina Design Registration #F-1507

0 1 2 3
REF. SCALE IN INCHES
PROJECT #26001727.00

Copyright © 2025 Oakley Collier Architects. These drawings are of the property of the Architect for use under his supervision. No reproduction or other use is allowed without permission.

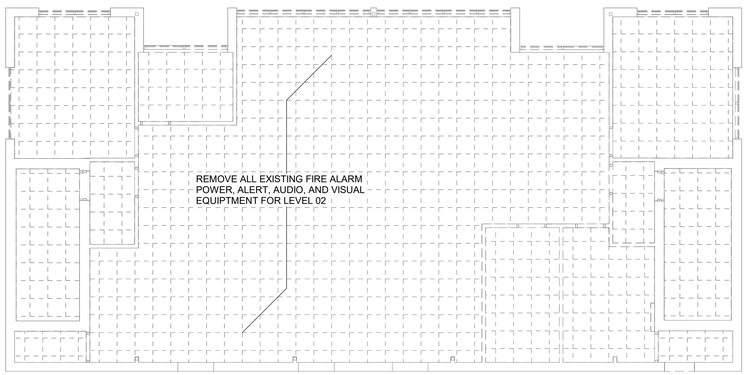

1 SECOND FLOOR DEMOLITION PLAN - FIRE ALARM

1/8" = 1'-0"

NORTH

2 SECOND FLOOR PLAN - FIRE ALARM

1/8" = 1'-0"

OAKLEY COLLIER ARCHITECTS
OCA
109 Candlewood Road, Rocky Mount, NC 27804 (P) 252.937.2500
205 W. Martin Street, Raleigh, NC 27601

RENOVATION FOR:
CRAVEN COUNTY GOVERNMENT CENTER EAST
CRAVEN COUNTY
1208 E. MAIN STREET, HAVELOCK, NORTH CAROLINA 28532

NORTH CAROLINA PROFESSIONAL CORPORATION
IMEG CORPORATION No. F-1507

Alex Bowling
NORTH CAROLINA PROFESSIONAL SEAL 058287 ENGINEER ALEX R. BOWLING
5/28/2026

GENERAL NOTE:
Prior to construction start. Contractor shall verify & be responsible for all Dimensions.

Revisions

#	Description	Date

Date	Project No.
05-28-26	26001727.00
Drawn By: Author	Sheet No.
Checked By: Checker	FA205

Sheet Title
SECOND FLOOR PLAN - FIRE ALARM

IMEG
www.imegcorp.com
3221 BLUE RIDGE ROAD
SUITE 113
RALEIGH, NC 27612
P: 919.571.1111

IMEG RESERVES PROPRIETARY RIGHTS, INCLUDING COPYRIGHTS, TO THIS DRAWING AND THE DATA SHOWN THEREON. SAID DRAWING AND/OR DATA ARE THE EXCLUSIVE PROPERTY OF IMEG AND SHALL NOT BE USED OR REPRODUCED FOR ANY OTHER PROJECT WITHOUT THE EXPRESS WRITTEN APPROVAL AND PARTICIPATION OF IMEG.
©2026 IMEG CONSULTANTS CORP.
North Carolina Design Registration #F-1507

0 1 2 3
REF. SCALE IN INCHES
PROJECT #26001727.00

Copyright © 2025 Oakley Collier Architects. These drawings are of the property of the Architect for use under his supervision. No reproduction or other use is allowed without permission.